A 77 GHz waveguide VCO for automotive application

D. S. Ko*, S. J. Lee*, S. G. Choi*, M. Han*, T. J. Baek*, H. C. Park*, J. K. Rhee*, D. C. Park**, J. H. Jung***, and Y. W. Park****

* Millimeter-wave Innovation Technology research center (MINT), Dongguk University
3-26 Phil-dong, Choong-Gu, Seoul, 100-715, Korea
** Chungnam National University, Daejeon, Korea
*** The Defense Acquisition Program Administration, Seoul, Korea
**** The Institute of Defense Acquisition, Kwangwoon University, Seoul, Korea

e-mail: jkrhee@dongguk.edu

***Abstract*-We have demonstrated a waveguide VCO with a transition from WR-12 to WR-10, which is operating at the center frequency of 77 GHz, for an automotive radar system. The waveguide transition has a 1.859 dB of S_{12} and -30.22 dB of S_{11} at 77 GHz. The fabricated VCO consists of a packaged GaAs Gunn diode, a varactor diode, two bias posts with LPF, a waveguide transition, and a back-short. The fabricated VCO has 885 MHz of the maximum bandwidth from 76.4 to 77.285 GHz and from 13.5 to 15.25 dBm of the output power. The error rate of the measured linearity of 695 MHz bandwidth is within 1.97 % from 2 to 15 V of varactor bias. The measured phase noise is -100.75 dBc / Hz at 1 MHz offset**

I. INTRODUCTION

The millimeter-wave automotive radar system is one of the key technologies for the future adaptive cruise control systems. With increased awareness and interest in safety issues on vehicular transportation, a variety of obstacle detectors has been researched and developed, among which a forward looking automotive radar has received a special attention as considered to be an essential element to complete a vehicular safety system [1][2]. Due to the increasing interest of automobile safety systems, collision avoidance millimeter-wave radar systems have emerged as an important sensor for an advanced safety vehicle (ASV) system. The millimeter-wave radar systems are very attractive due to high resolution, the resulting compact chip size, and small antenna dimensions.

In 76~77 GHz frequency range is recently studied the frequency modulated continuous wave (FMCW) radar system for automotive application [3]-[6]. A FMCW radar sensor generally requires a voltage controlled oscillator (VCO) which has wide bandwidth with good linearity, high output power and low phase noise characteristics [7].

A radar requires a stable millimeter-wave signal source. The signal generation can be realized either directly by a VCO or by multiplication from a lower frequency. For 77 GHz automotive radar systems, signals in 77 GHz band must be stabilized with low phase noise.

In this paper, we report the waveguide VCO which can be operated at 77 GHz using a GaAs Gunn diode and a varactor diode with waveguide transition from WR-12 to WR-10. We have obtained excellent performances enough to apply the anti-collision radar for vehicles

II. DESIGN OF THE VCO, LPF, AND WAVEGUIDE TRANSITION

A. *Design of cavity and LPF for the VCO*

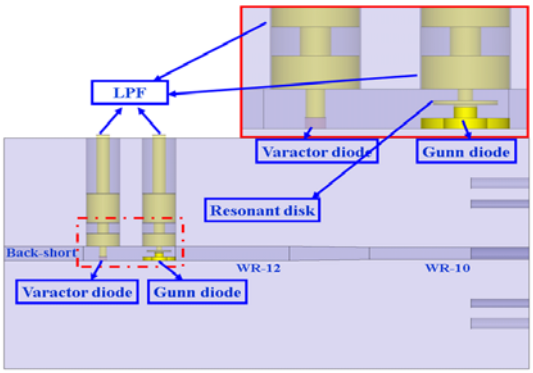

Figure 1. Cross sectional view of the waveguide VCO

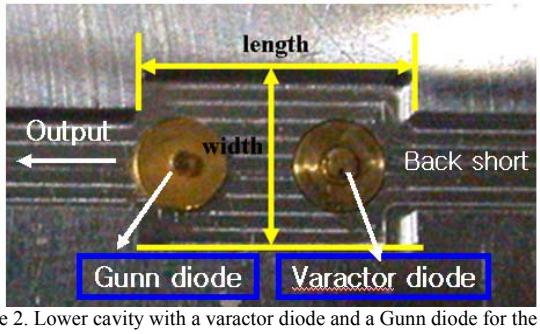

Figure 2. Lower cavity with a varactor diode and a Gunn diode for the VCO

Fig. 1 shows a cross-sectional view of the 77 GHz waveguide VCO and Fig. 2 illustrates the top view of the VCO. A GaAs Gunn diode and a varactor diode are mounted in the

lower cavity. The distance between the Gunn and varactor diodes is about $\lambda_g/2$ at 38 GHz, where λ_g is the guided wavelength [8]. The bias posts are located on top of the Gunn and varactor diodes, and the location of resonant disk is determined by the height of mounting Gunn diode [9].

The cavity is designed such that only the second harmonic mode, which is 77 GHz, is outputted through the WR-12 by Iris filter to WR-10 transition. It is simulated and designed by HFSS. The fundamental oscillation of cavity uses eigen-mode and the impedance by de-embedding mode. However, the results of simulation are not accurate because of the results only for passive model.

In the cavity size, the width affects more the oscillating frequency than the length. If we want to oscillate center frequency at 94 GHz, we should decrease the width and the distance between the Gunn and varactor diodes. Of course, the length will be decreased due to the distance between Gunn and varactor diode.

A micrometer–adjustable back short is included to tune maximum output power.

Two bias posts to the Gunn and varactor diodes have a low pass filter (LPF) and the bias post of the Gunn diode has resonant disk to oscillate the desired frequency.

In proposed waveguide VCO, the 38 GHz and 77 GHz of signal coexist in the cavity. We designed the LPF which has performance to cutoff 38 GHz and 77 GHz, simultaneously.

The LPF consists of three stages and the length of each part is usually decided by (1)

$$l = \frac{\lambda_c}{4\sqrt{\varepsilon_r}} \qquad (1)$$

The λc is designed for the center frequency of 77 GHz and the ε_r is relative permittivity of the Teflon insulation tape.

The Fig. 3 shows the simulation results that the S_{21} of the designed LPF is -39.07 dB at 38 GHz and -45.82 dB at 77 GHz, respectively. The thickness of resonant disk is fixed 0.14 mm by previous work and we used from 2.4 mm to 2.7 mm of the diameter by 0.05 mm step to tune the fundamental frequency [10][11].

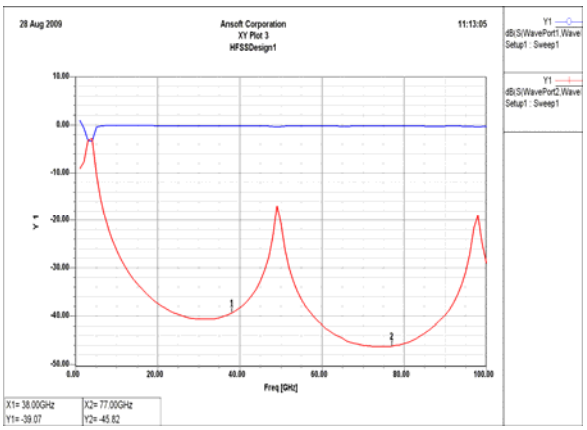

Figure 3. The simulation results of LPF by HFSS

B. Design and fabricated WR-12 to WR-10 transition

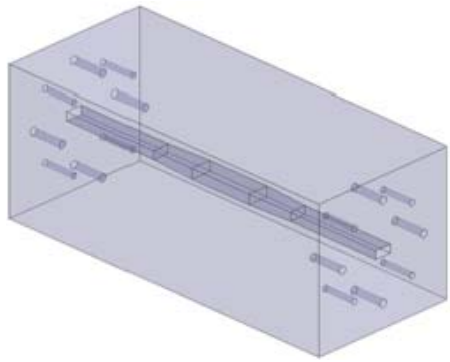

(a)

(b)

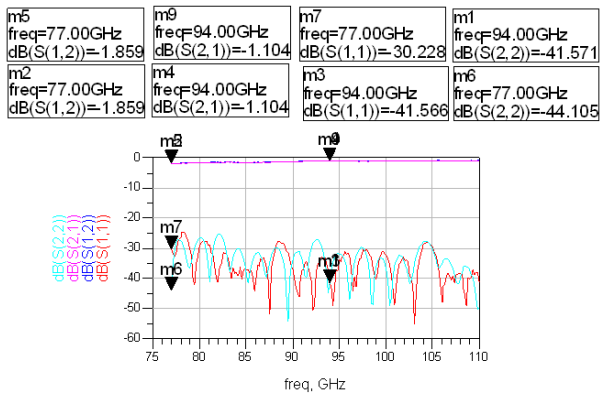

(c)

Figure 4. (a) The drawing of the back-to-back waveguide transition (b) The fabricated waveguide transition jig (c) the measured results of waveguide transition

We used the waveguide transition from WR-12 to WR-10. The waveguide VCOs, which are operated at E-band, are normally used WR-12 by Iris filter. Of course, we are able to make a VCO using WR-10 with good performance [11]. However, the WR-12 is more suitable to operate at 77 GHz than WR-10 with good performances to apply the radar system.

The WR-12 has better noise performance than WR-10 because WR-12 has lower cutoff frequency than the WR-10. The height of cavity using WR-12 is 0.23 mm higher than

cavity using WR-10. Therefore, the cavity using WR-12 is less influenced by manufacture errors.

The Fig. 4 (a) is shown the drawing of the back-to-back transition. The simulation results are 0 dB of S_{21} and -50.72 dB of S_{11} at 77 GHz, respectively. The fabricated back to back waveguide transition and the measurement results are shown in the Fig. 4 (b) and (c). The insertion loss (S_{12}) is 1.859 dB at 77 GHz.

III. Tuning and Measurement Results of the Fabricated VCO

The measurement system set up is shown in Fig. 5. The Bandwidth is measured by E4407B spectrum analyzer with an extended harmonic mixer of Agilent and the output power is measured by E4419B EPM series power meter of Agilent.

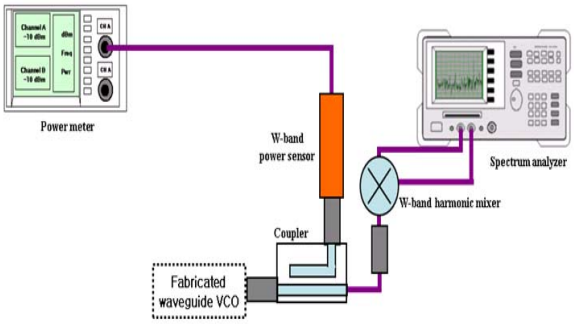

Figure 5. The measurement system of waveguide VCO

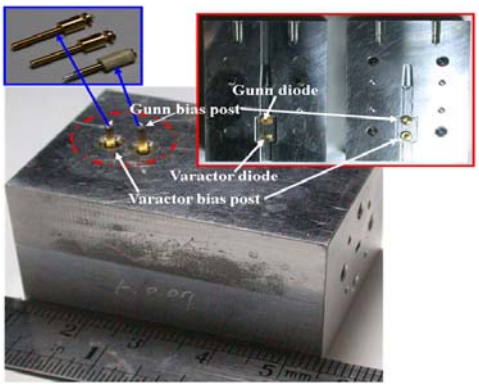

Figure 6. The fabricated waveguide VCO with elements

The Fig. 6 shows the fabricated waveguide VCO with elements. The bias posts are wrapped by Teflon insulation tape of the thickness of 0.3 mm to protect short circuit from jig ground when the bias supplied to the Gunn and varactor diodes.

The center frequency is tuned by changing the diameter of resonant disk. The disk has the diameter of 2.55 mm. We tuned the maximum output power by changing the position of varactor diode and a back-short. The position of varactor diode affects output power mainly, so we turned the mounted varactor diode about 30° until finding out the position of varactor diode for the maximum output power of VCO, and then we controlled the back short.

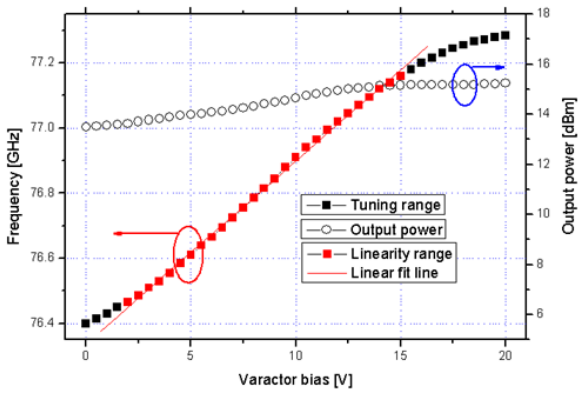

Figure 7. The measured data for frequency and output power

The fabricated VCO has 885 MHz of a maximum bandwidth and over 13 dBm of output power. Fig. 7 is shown the measured results of fabricated VCO.

The bandwidth is 885 MHz from 76.4 to 77.285 GHz and the output power is from 13.5 to 15.25 dBm. To calculate the linearity range, we did linear fit using Originpro 7.5. The linearity is calculated using (2)

$$y = a + bx \tag{2}$$

, where y is the frequency, x is the measured value at each the varactor diode voltage, a is reference frequency, and b is the slope of the linear fit line in Fig. 7. a and b can be obtained by the Originpro 7.5 and then we use (3)

$$f_{measure@V} - y = M \tag{3}$$

, where $f_{measure@V}$ is oscillating frequency at each varactor diode. The calculated value M has a different value each varactor diode voltage. The maximum value ($M_{maximum}$) among various values of M is substituted into (4)

$$\frac{100 \times M_{\max imum}}{Bandwidth@MHz} = Linearity(\%) \tag{4}$$

The calculated 1.97 % of linearity is in the band of 695 MHz from 2 to 15 V of varactor voltage ranges. These are excellent performance to made FMCW radar application.

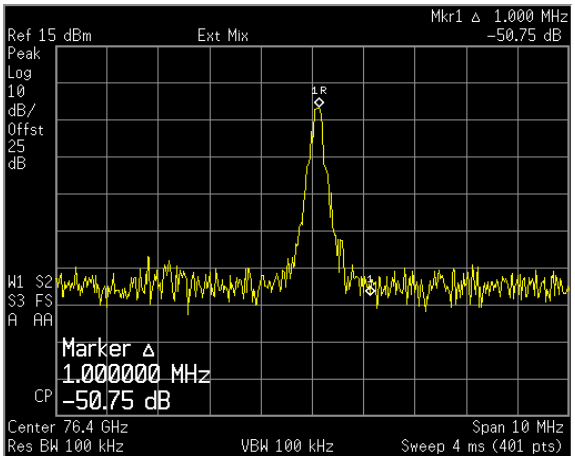

Figure 8. The measured phase noise at 10 MHz Span

From Fig. 8, the phase noise is calculated in 10 MHz span and resolution band width (RBW) of 100 KHz from 1 MHz offset by (5) and (6) [12].

$$P_{noise} = P_{offset} - 10\log(RBW) \quad (5)$$

$$P_{offset} = P_{sideband} - P_{carrier} \quad (6)$$

, where P_{offset} is value of the 1 MHz offset between carrier power level and sideband power levels (-50.75 dB). We have the calculated phase noise of - 100.75 dBc / Hz at 1 MHz offset.

IV. Conclusion

The 77 GHz waveguide VCO using GaAs Gunn diode and varactor diode with waveguide transition was designed and fabricated. The fabricated VCO shows excellent performances, which are wide bandwidth, high output power and 1.97 % linearity in the bandwidth of 695 MHz. The LPF is designed - 39.07 dB at 38 GHz and - 45.82 dB at 77 GHz, respectively. The waveguide transition has insertion loss of -1.859 dB but the measured output power is enough high for automotive applications. Also, the phase noise is below - 100 dBc/Hz at 1 MHz offset from the peak of the oscillating signal.

Acknowledgment

This work was supported by the Millimeter-wave Innovation Technology Research Center (MINT) at Dongguk University, Seoul, Korea

References

[1] K. Kamozaki, K. Kurita, N. Hioe, W. Tanimoto, T. Ohta, H. Nakamura, T. Kondoh, H., "A 77GHz T/R MMIC chip Set for Automotive Radar syatems," *GaAs IC symposium Dig*., pp. 275-278, 1997.

[2] J.Udomoto, T. Matsuzuka, S. Chaki, K. Kanaya, T. Katoh, Y. Notani, T. Hisaka, T. Oku, T. Ishikawa, M. Komaru, and Y. Matsuda, "A 38/77 GHz MMIC Transmitter Chip Set for Automotive Applications," IEEE *MTT-S Dig.*, vol. 3, pp. 2229-2232, 2003.

[3] K. W. Chang, H. Wang, G. Shreve, J. G. Harrison, M. Core, A. Paxton, M. Yu, C. H. Chen, and G. S. Dow, "Forward-looking automotive radar using a W-band single-chip transceiver," IEEE *MTT Trans.*, vol. 43, no. 7, pp. 1659-1688, Jul. 1995.

[4] V. von Tils, "Trends and Challenges in Automotive Electronics," Power Semiconductor Devices and IC's, 2006, ISPSD 2006. IEEE *Inter. Symp*., pp. 1-3, Jun. 2006.

[5] T. V. Kerssenbrock, T. Musch, B. Schiek, P. Heide, "Novel 77 GHz Low-Cost Automotive Radar Module with Fractional-PLL Frequency Linearizer," in *Proc. 29rd Eur. Microw. Conf. 1999*, vol. 2, pp. 5-8, Oct. 1999.

[6] H. H. Meinel, "Automotive Millimeterwave Radar - History and Present Status," in *Proc. 28rd Eur. Microw. Conf. 1998*, vol. 1, pp. 619-629, Jun. 1998.

[7] J. D. Park, W. J. Kim, C. W. Lee, "A novel method for beat frequency error correction for a low cost FMCW radar using VCO sweep characteristics," in *Proc. Radar Conf., EURAD*, pp. 371-374, Oct. 2005.

[8] E. L. Holzman, R. S. Robbertson, *Solide-State Microwave Power Oscillator Design*, Artech House, INC., 1992.

[9] D. S. Ko, S. J. Lee, T. J. Baek, S. G. Choi, M. Han, H. C. Park, J. K. Rhee, J. H. Jung, and Y. W. Park, "New Tuning Method for 94 GHz Waveguide Voltage Controlled Oscillator", IEEE MWCL, vol. 21, no. 3, Mar. 2011.

[10] D. S. Ko, S. W. Moon , M. K. Lee, S. J. Lee, D. H. Ko, S. H. Bang, Y. H. Baek, M. Han, S. G. Choi, T. J. Baek, S. D. Kim and J. K. Rhee, "94 GHz Waveguide VCO with Magic T for FMCW radar," in Proc. 2008 Eur. Micro. Conf., pp. 1234-1237, Otc. 2008

[11] J. H. Kim, D. S. Ko, S. J Lee, Y. H. Baek, S. G. Choi, M. Han, T. J. Baek, S. W. Park, Y. S. Chae, and J. K. Rhee, "Waveguide Voltage Controlled Oscillator for 77 GHz FMCW Radar", *Glob. Symp. Millimeter waves*, Song-do, Korea, pp. 103-106, Apr. 2010.

[12] K. H. Y. Ip, and G. V. Eleftheriades, "A Compact CPW-Based Single Layer Injection-Locked Active Antenna For Array Applications," IEEE *Trans. Microwave Theory & Tech.*, vol. 50, issue 2, pp. 481-486, February