Folded-dipole-driven quasi-Yagi Antenna for 60-GHz Wireless Applications

Son Xuat Ta, Byoungchul Kim, and Ikmo Park
School of Electrical and Computer Engineering, Ajou University, Suwon, Korea

***Abstract* – A folded-dipole-driven quasi-Yagi antenna that operates in the 60-GHz frequency region is described. The antenna is designed on both sides of low permittivity liquid crystal polymer substrate to minimize the dielectric loss, and is matched with a 50-Ω microstripline. The folded dipole driver is connected to the microstrip feedline by a broadband microstrip-to-coplanar stripline transition with a quarter radial stub. The key motivation for the use of a folded dipole is to increase the input impedance at the driver, so that it can be matched with the characteristic impedance of the coplanar stripline. The antenna exhibited an impedance bandwidth of 51.6–69.4 GHz with a –10 dB reflection coefficient and a flat gain of 5.04–5.51 dBi within this bandwidth.**

I. INTRODUCTION

The 60-GHz bands have been allocated for high-data-rate wireless communication systems [1]. In general, antennas for high-data-rate wireless communication systems must be broadband, low profile, lightweight, low cost, and easy to fabricate. The quasi-Yagi antenna, which is based on a combination of the classical Yagi–Uda antenna and a microstrip antenna, is especially suitable for 60-GHz applications because it satisfies all of the above requirements. 60-GHz quasi-Yagi antennas have been demonstrated using complementary metal–oxide–semiconductor (CMOS) compatible manufacturing technology [2, 3], and have been fabricated on semi-insulating GaAs membrane substrates [4]. However, these antennas used regular half-wavelength dipole drivers, which are not well matched with the characteristic impedance of the coplanar stripline on low permittivity substrates. This is because the physically realizable characteristic impedance of a coplanar stripline is usually higher than the input impedance of a regular dipole.

In this paper, a broadband folded-dipole-driven quasi-Yagi antenna in the 60-GHz frequency region is described with a bandwidth of 51.64–69.36 GHz and a flat gain of 5.04–5.51 dB. The folded dipole is used to reduce the impedance mismatch between the coplanar stripline and the driver for the quasi-Yagi antenna on low-permittivity substrate. The antenna was designed on both sides of a liquid crystal polymer (LCP) substrate, which is widely used in antenna designs for millimeter-wave applications.

II. ANTENNA STRUCTURE AND RESULTS

Figure 1 shows the geometry of the folded-dipole quasi-Yagi antenna. The conductor was placed on both sides of a 6×6-mm LCP substrate, which had a relative dielectric constant of ε_r = 3.16 and was 50.8-μm-thick. The antenna comprised a microstrip feedline, a folded dipole driver, a parasitic strip element as a director, and a truncated ground plane as a reflector. The driver and the director were printed on the top side of the substrate. Since the microstrip feedline cannot be directly connected with the driver because of the structure of the quasi-Yagi antenna, a broadband microstrip-to-coplanar stripline with a quarter radial stub was used at the transition between the two. The entire design was optimized by using the full-wave electromagnetic simulator CST Microwave Studio. The design parameters of the antenna were optimized for broadband characteristics and small gain variation. The optimized design parameters are as follows: W_{ms} = 122, D = 300, g = 60, R = 0.7, T = 800, L_{driv} = 1960, L_{dir} = 1240, S = 500, S_d = 80, and w_c = 500, where all units are μm.

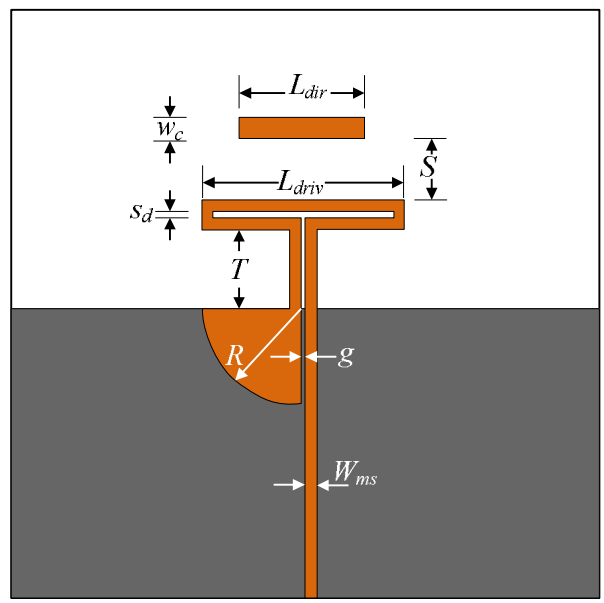

Fig. 1. Geometry of the antenna

Figure 2 shows the reflection coefficient of the antenna. The bandwidth was 51.64–69.36 GHz when the reflection coefficient was less than –10 dB. The radiation patterns in the *E*- and *H*-planes at 56, 60, and 64 GHz are shown in Figure 3. At 56 GHz, the gain of the antenna was 5.18 dB, and the half-power beamwidth (HPBW) was 65.0° along the *E*-plane and 191.8° along the *H*-plane. At 60 GHz, the gain of the antenna was 5.3 dB, and the HPBW was 68.5° along the *E*-plane and 186.7° along the *H*-plane. At 64 GHz, the gain of the antenna

was 5.5 dB, and the HPBW was 74.5° along the *E*-plane and 166.8° along the *H*-plane. As shown in Figure 3, the gain of the antenna was in the range 5.04–5.51 dB, which corresponds to a gain variation of 0.47 dB within the impedance bandwidth. Therefore, we can expect stable operation for both transmission and reception in 60-GHz high-data-rate wireless communication systems.

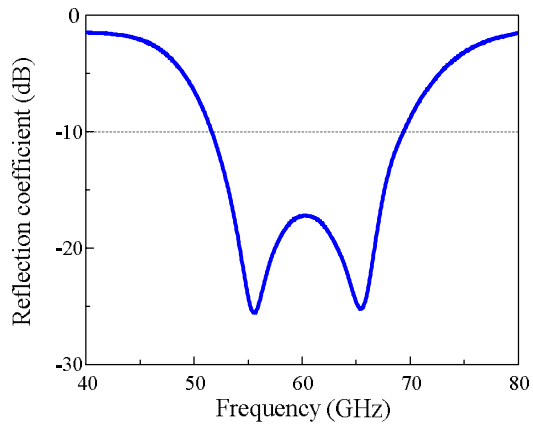

Fig. 2. Reflection coefficient of the antenna.

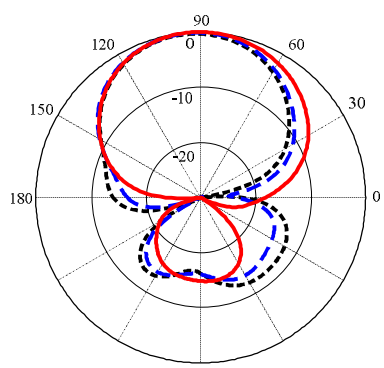

(a)

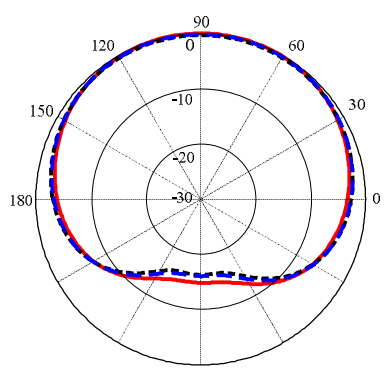

(b)

Fig. 3. Radiation patterns of the antenna: (a) *E*-plane and (b) *H*-plane. -------- 56 GHz, – – – – 60 GHz, ——— 64 GHz.

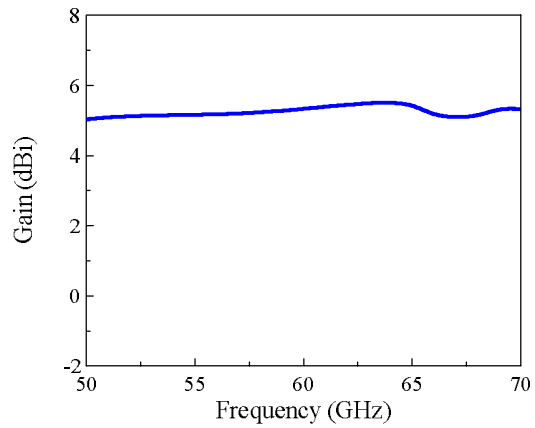

Fig. 4. Gain of the antenna.

III. CONCLUSIONS

A broadband folded-dipole-driven quasi-Yagi antenna for 60-GHz wireless applications is described. A broadband microstrip-to-coplanar stripline transition with a quarter radial stub was used to improve the impedance matching between the folded dipole and the microstrip feedline. The impedance bandwidth was 51.64–69.36 GHz when the reflection coefficient was less than –10 dB, and the gain was 5.04–5.51 dB within this bandwidth. The broadband characteristics, planar structure, low gain variation, and stable radiation pattern of the antenna make it suitable for 60-GHz high-data-rate communication systems.

ACKNOWLEDGMENT

This research was supported by Basic Science Research Program through the National Research Foundation of Korea (NRF) funded by the Ministry of Education, Science and Technology (No. 2009-0083512).

REFERENCES

[1] P. Smulders, "Exploiting the 60 GHz band for local wireless multimedia access: Prospects and future directions," *IEEE Comm. Mag.*, vol. 40, no. 1, pp. 140–147, 2002.

[2] Y. Zhang, M. Sun, and L. Guo, "On-chip antennas for 60-GHz radios in silicon technology," *IEEE Trans. Electron. Dev*, vol. 52, no. 7, pp. 1664–1668, 2005.

[3] S. Hsu, K. Wei, C. Hsu, and R. Chuang, "A 60-GHz Millimeter-wave CPW-fed Yagi antenna fabricated by using 0.18-μm CMOS technology," *IEEE Electron. Device Lett.*, vol. 29, no. 6, pp. 625–627, June 2008.

[4] D. Neculoiu, G. Konstantinidis, L. Bary, A. Muller, D. Vasilache, A. Stavinidris, P. Pons, and R. Plana, "Membrane-supported Yagi-Uda milimeter-wave antennas," *European Conference on Antennas and Propagation*, Nice, France, Oct. 2006.