Design of Band-Pass Filter Using Gap Waveguide Technology

A. Uz. Zaman, A. Algaba Brazález, P.-S. Kildal
Department of Signals and Systems, Chalmers University of Technology,
SE-412 96 Göteborg, Sweden

***Abstract*— A narrow band microwave filter design based on recently proposed low loss, fabrication friendly gap waveguide technology is presented in this work. A 3rd order filter with typical chebyshev response and 1% fractional bandwidth is designed at 42 GHz. The filter design involves also the design of the ridge gap waveguide resonator without metal side walls. The confinement of the electromagnetic field within the resonators and the filter structure is obtained by using a periodic square pin structure which stops the propagation of wave. Good filter response is obtained in the full wave simulation. Apart from this waveguide filter, a conventional microstrip bandpass filter is also shielded with newly proposed pin lid packaging solution based on gap waveguide technology. The performance improvement of the microstrip filter is also shown in this work.**

I. Introduction

Narrow band microwave filters are one of the very critical components in conventional full-duplex RF systems. Usually, these diplexer filters have very low loss and very sharp roll off requirements. The full-duplex communication systems are normally transmitting and receiving simultaneously. The transmitted power in the system is way too high in comparison to the received power. So, the transmitter filter must have very high attenuation in the receive band to stop the intermediation products and noise to be fed into the receiver. Also, the loss of the transmitter filter needs to be low due to the linearity and efficiency constrains of power amplifiers. In the receiver case, the noise figure of the receiver is dictated by the losses in the receiver filter as this filter sits before the LNA in the receiver chain. So, the receiver filter should also have a low insertion loss and very high selectivity in the transmit band. But these low insertion loss and high selectivity are two factors which are contradictory to each other. As the number of resonators in a filter is increased in order to increase the selectivity, the insertion loss increases [1-2]. Thus for a specific insertion loss, a narrow band filter usually requires resonators with higher unloaded Q than a broad band filter. Also, the power handling capability is an issue for these filters, specially for the transmit case. Standard metal waveguide filters become the obvious choice for these types of narrow filters because of the low loss, high Q and high power handling capability. Apart from these waveguide filters, some microstrip band-pass filters are also used in a conventional RF system. These microstrip band-pass filters are usually placed after the mixers to suppress the unwanted mixing products.

But as the frequency of operation approaches towards mmWave and submmWave, the physical dimensions of the waveguide components decrease and very high level of precision is needed to manufacture these waveguide filters based on standard metal machining technique. Usually, these waveguide filters are manufactured in two split blocks. So, very good electrical contact between the two parts and very good alignment is needed for satisfactory performance of these filters. This high degree of mechanical tolerance increases the cost of the product and also causes a great delay in production time.

In case of the microstrip filters, the radiation from the open ended microstrip discontinuities cause unwanted radiation at high frequencies and require very good metal shielding. But when shielded with smooth metal walls, the cavity modes appear due to large size of the cavity and destroy the filter performance.

To mitigate these problems of conventional waveguide components and microstrip circuits, a new technology named gap waveguide has been proposed recently [3-8]. This gap waveguide technology has the great advantage of relaxing the critical mechanical issues such as good electrical contact and alignment between the two split blocks. Also, the losses of the newly proposed gap waveguides are found to be comparable with the standard rectangular waveguide [9]. Thus, the filters based on gap waveguide technology can be manufactured with more flexible mechanical tolerance and can have the electrical performance similar to that of a rectangular waveguide filters. In this work, a 3rd order filter design based on ridge gap waveguide technology is presented.

Also, the gap waveguide technology has been proposed as a good packaging technique in [10-11]. This packaging technique is applied in case of a 3rd order coupled line microstrip filter and good performance improvement is observed. This microstrip coupled line filter is also presented in this work.

II. Ridge gap waveguide Resonator and Filter

The ridge gap waveguide is shown in figure 1. This waveguide has a bottom plate with a metal ridge surrounded by square metal pins. The upper metal plate is a smooth one and placed at a distance smaller than $\lambda/4$ on top of the ridge and pin surface. Most importantly, this waveguide carries a desired quasi-TEM mode and does not need any electrical contact between the upper metal plate and the bottom plate. The periodic pin surface on the bottom plate stops the propagation of the EM wave in any direction outside the ridge. The lateral field decay for this pin surface can be upto -60 dB after three rows of pins. So, the electrical contact between the top metal plate and the bottom metal plate becomes insignificant and does not have any electrical implication.

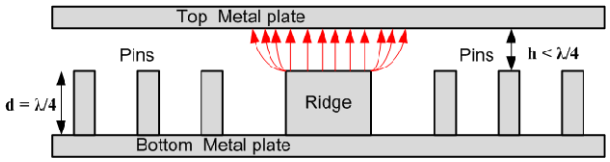

Fig.1 Ridge gap waveguide geometry.

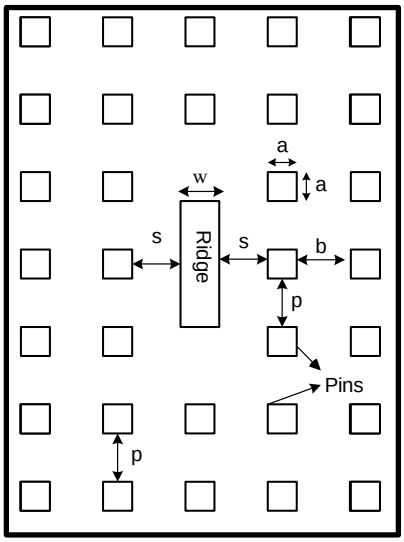

Fig.2 Ridge gap waveguide resonator, a= 0.8mm, w =1mm, p = 1.25 mm, s = 1mm, b = 1.35 mm , top metal plate not shown.

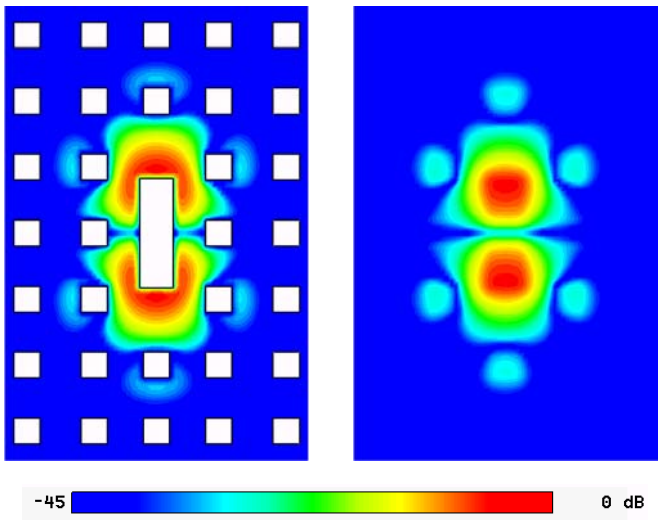

Fig. 3 Vertical E field distribution within a ridge gap resonator

The figure 2 and 3 above shows a half wavelength open circuit ridge gap waveguide resonator and the field distribution for that resonator. It is clearly seen in figure 3 that- the vertical E-field decays very fast even after two rows of pins and the decay level is up to -45 dB. So, after two of pins, the presence of the metal side walls become insignificant and can be removed away from the resonator structure. This gives the advantage of having a resonator without the strict manufacturing requirements and tolerance issues such as good electrical contact, good alignment, pressure contact etc. The frequency response of the resonator is shown in figure 4. The simulated Q value for this resonator with conductivity of copper is 2240.

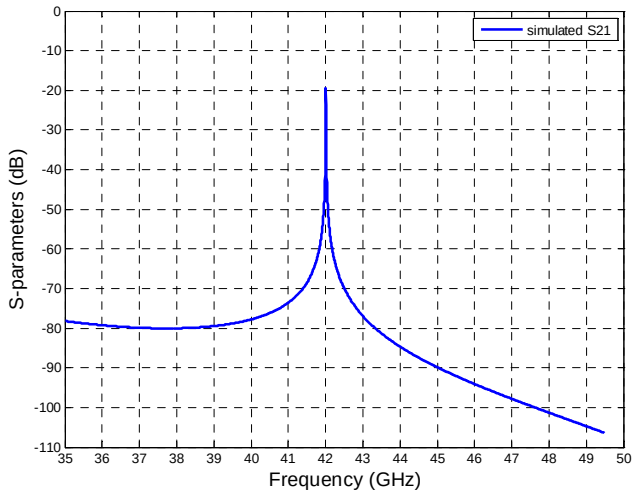

Fig.4 Ridge gap waveguide resonator frequency response

Once the resonator is designed, the coupling between two adjacent resonators is also studied. The coupling is controlled by varying the distance 's' between the ridge and adjacent row of pins. This is shown in figure 5 and 6. The computed coupling coefficients for different values of 's' is shown in figure 7. The required coupling coefficient 'k' for a 3rd order chebyshev filter with 0.1 dB ripple is k = .0093 and this value is achieved for s = 0.84 mm.

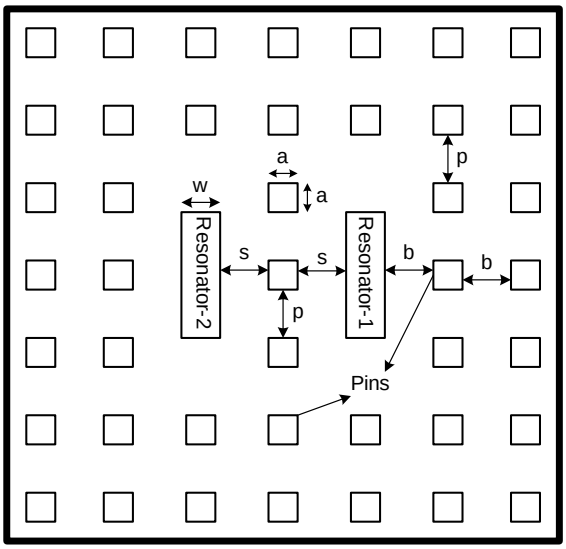

Fig. 5 Coupling of two ridge gap resonators

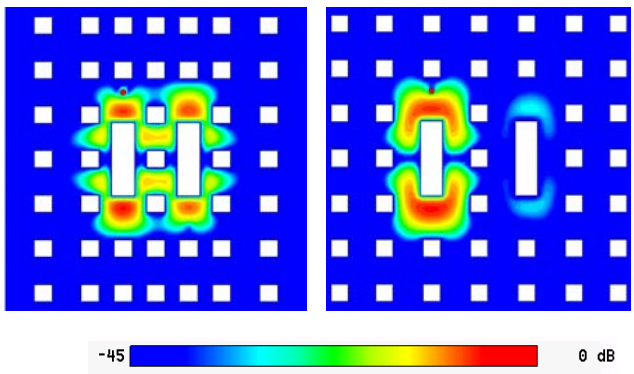

Fig. 6 Changing in coupling of two ridge gap resonators by changing 's'

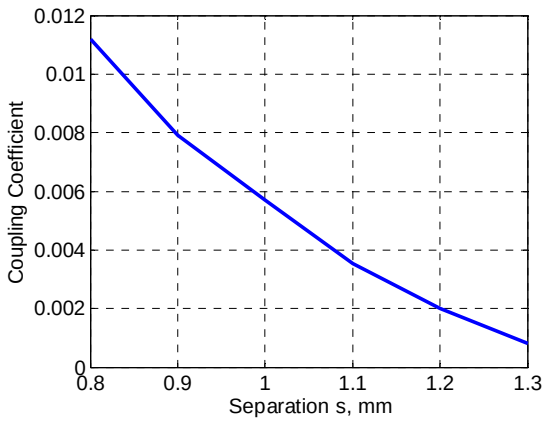

Fig. 7 Coupling coefficient '*k*' vs '*s*'

After studying the coupling coefficients, the external Q is obtained for a feeding structure shown in figure 8. The value of w, x and y is kept constant and only z is varied to achieve the required loaded Q for the input and output resonator. The loaded Q required in this 3rd order filter design is 114 and this value is obtained with w = 1mm, x = 1mm, y = 0.8 mm and z = 0.4 mm.

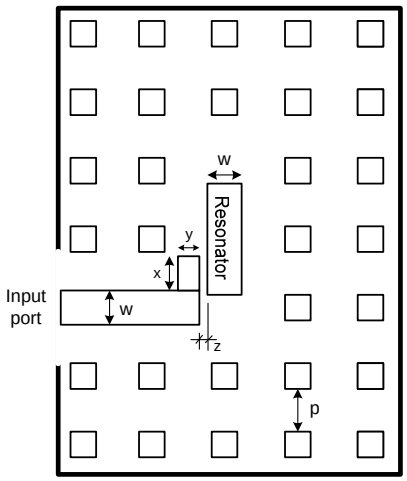

Fig. 8 Excitation of the input and output ridge gap resonator

Once the external Q or loaded Q and the coupling coefficients are found, the complete filter geometry is simulated with a full wave EM simulator such as CST. The complete filter geometry is shown in figure 9 and the simulated response is shown in figure 10.

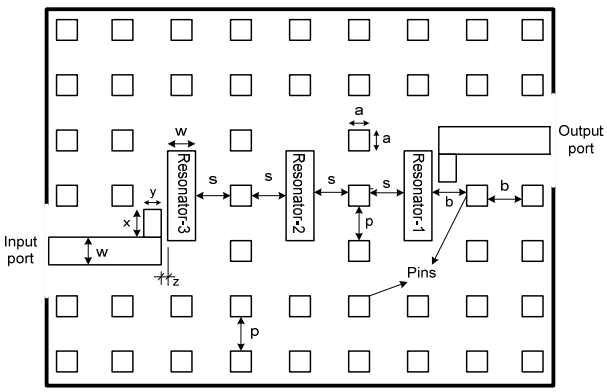

Fig. 9 Complete 3rd order filter geometry

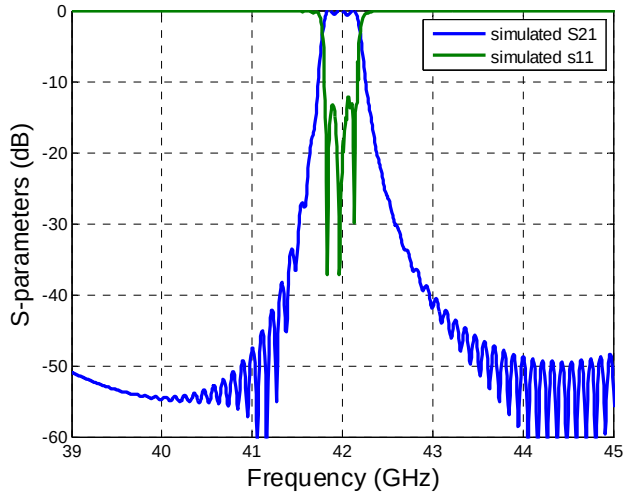

Fig.10 Simulated S parameters for the 3rd order filter

III. Pin Lid Packaging of Microwave Filter

Microstrip filters are widely applied for RF/Microwave applications. They are especially important in wireless communication systems where it is necessary to suppress undesired signals induced by typical non- linear components like mixers or amplifiers. Semi open structures like microstrip resonators can radiate significantly at high frequency for a realistic substrate thickness. This radiation is either free to leak away from the structure if kept open or induce currents on the metal enclosure used for shielding. In open case, the radiation loss can be significant and degrades the performance of the filter. In enclosed case the loss due to induced current can be minimized by putting the top and side enclosure walls far (6-8 times the substrate thickness) from the resonator [12]. This is because, the fields intercepted by the conducting enclosure walls is decayed to a very weak level in comparison to the strong field within the vicinity of the resonator. But increasing the enclosure size also causes an increase in cavity size allowing the cavity modes to propagate within the cavity. As mentioned earlier in section 1, to solve this radiation and cavity mode problem, pin lid packaging is considered as very potential candidate.

A 3rd order microstrip parallel coupled-line bandpass filter has been chosen to work at a center frequency of 15 GHz. This center frequency guarantees that the filter will work within the cut-off bandwidth of those pin and gap dimensions that have been used in [10]. The filter is specified to produce chebyshev response with 0.5 dB ripple and 10% bandwidth and is shown in figure 11. The detail of the pin lid structure is shown in figure 12. The designed microstrip filter has been analysed for four cases: unpackaged or open case, packaged with smooth metal cover, packaged with an ideal PMC lid, and packaged with pin lid. The simulated response for the filter is presented in figure 13. When the filter is not packaged, the radiation losses are so high that the passband is not clearly defined. If the filter is packaged with a smooth metal cover, a slightly sharper response is obtained compared to the open case, but there is still distortion in the passband. However, when the filter is covered with ideal PMC surface and the pin lid, the filter response becomes very neat with a well defined passband.

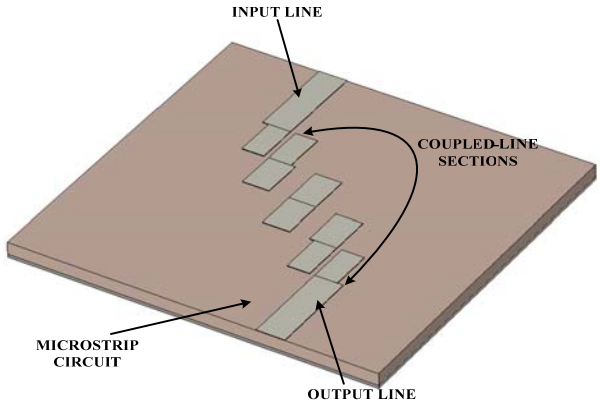

Fig.11 Microstrip Coupled line 3rd order filter

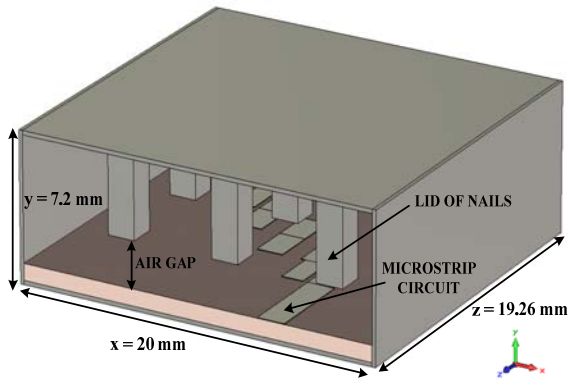

Fig.12 Microstrip Coupled line 3rd order filter with pin lid package

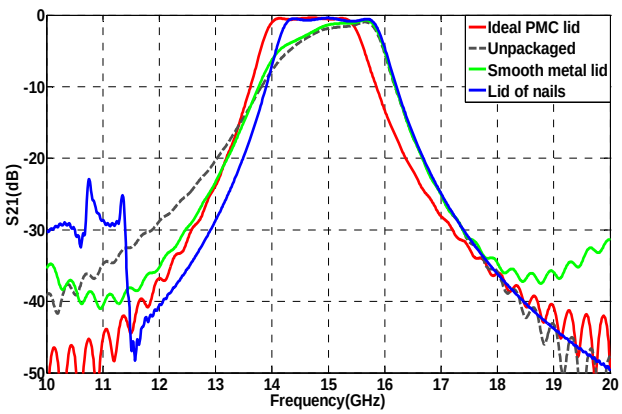

Fig.12 Microstrip filter response for different packaging cases

IV. Conclusion

Newly introduced ridge gap waveguide technology is used to design a high Q resonator and narrow band microwave filter with a fractional bandwidth of 1% at 42 GHz. Good electrical performance is obtained for the proposed filter structure. The proposed ridge gap waveguide filter geometry does not have the tight mechanical restriction usually applicable to the standard waveguide cavity filters regarding good electrical contact, good surface finishing and good alignment. So, this proposed structure offers more flexibility in manufacturing and is convenient for large scale production. Apart from high Q cavity filter, a typical microstrip coupled line filter is also shielded with a pin lid packaging solution based on gap waveguide technology. The proposed pin lid solution effectively stops unwanted radiation from the microstrip discontinuities and suppresses the cavity modes. So, there is a considerable improvement in filter response.

Acknowledgement

This work has been supported by Swedish Strategic Research Foundation (SSF) within the Chalmers Microwave Antenna Systems Research Center CHARMANT, and by the Swedish Research Council VR.

References

[1] Ian C.Hunter, L.Billonet, Bernard Jarry and Pierre Guillon "Microwave Filters-Applciaitons and Technology," *IEEE Trans. Microwave Theory and Technique*, Vol. 50, No. 3, pp. 794-804, March 2002.

[2] S. B. Cohn, "Direct-coupled resonator filters," *Proc. IRE*, vol. 45, pp.187–196, Feb. 1957.

[3] P.-S. Kildal, E. Alfonso, A. Valero-Nogueira and E. Rajo-Iglesias, "Local metamaterial-based waveguides in gaps between parallel metal plates", *IEEE Antennas and Wireless Propagation letters*,Volume 8, pp. 84-87, 2009.

[4] P.-S. Kildal, A. Uz Zaman, E. Rajo-Iglesias, E. Alfonso and A. Valero-Nogueira, "Design and experimental verification of ridge gap waveguides in bed of nails for parallel plate mode suppression", *IET Microwaves, Antennas & Propagation*, Vol.5, Iss.3, pp. 262-270, March 2011.

[5] M. Bosiljevac, Z. Sipus and P.-S. Kildal, "Construction of Green's functions of parallel plates with periodic texture with application to gap waveguides - A plane wave spectral domain approach", *IET Microwaves, Antennas & Propagation*., Vol. 4, Iss. 11, pp. 1799–1810, Nov. 2010.

[6] P.-S. Kildal, ''Three metamaterial - based gap-waveguides between parallel metal plates for mm /submm waves,'' *3rd European Conference on Antennas and Propagation*, Berlin, March 2009.

[7] A. Valero-Nogueira, E. Alfonso, J. I. Herranz, P.-S. Kildal, "Experimental demonstration of local quasi-TEM gap modes in single-hard-wall waveguides", *IEEE Microwave and Wireless Components Letters*, Vol. 19, No.9, pp. 536-538, 2009.

[8] Zaman, A.U.; Rajo-Iglesias, E.; Alfonso, E.; Kildal, P.-S.,''Design of transition from coaxial line to ridge gap waveguide'', *IEEE Antennas and Propagation Society International Symposium*, June 2009.

[9] E. Pucci, A.Uz. Zaman, E. Rajo-Iglesias, P.-S. Kildal, A. Kishk, "Losses in ridge gap waveguide compared with rectangular waveguides and microstrip transmission lines", *4th European Conference on Antennas and Propagation, EuCAP 2010*, Barcelona, April 2010.

[10] E. Rajo-Iglesias, A. Uz Zaman, P.-S. Kildal, "Parallel plate cavity mode suppression in microstrip circuit packages using a lid of nails", *IEEE Microwave and Wireless Com-ponents Letters*, Vol. 20, No. 1, pp. 31-33, Dec. 2009.

[11] A.Uz. Zaman, J.Yang, P.-S. Kildal, "Using Lid of Pins for Packaging of Microstrip Board for Descrambling the Ports of Eleven Antenna for Radio Telescope Applications", *IEEE Antennas and Propagation Society International Symposium*, 2010.

[12] J.Sheng Hong and M.J. Lancaster, "Microstrip Fitlers for RF/Microwave Applications", John Wiley & Sons, ISBN: 047138877-7.