LTCC Platform for Millimeter Wave Modules

T. Vähä-Heikkilä and M. Lahti

VTT Technical Research Centre of Finland
P.O.BOX 1000, Tietotie 3, Espoo,
02044 VTT, Finland

***Abstract*-This paper introduces Low Temperature Co-Fired Ceramics (LTCC) technology platform. LTCC platform is also well suited for the realization of antenna arrays, filters and modules from RF to millimeter wave frequencies. Examples of realized components and modules are presented in the paper.**

I. Introduction

Most of consumer related radio applications are in the range from few hundreds of MHz to 6 GHz currently. However, trends in last years have been towards higher frequencies. Automotive radars are already used in microwave region at 24 GHz and products are also available around 77 GHz. Also, demand for higher data rate transmission (several G/bits per second) systems has pushed telecommunication systems similarly for millimeter wave frequencies, where wider bandwidths are available. As an example, short range high data rate communication standards have been defined for V-band (50-75 GHz) applications around 60 GHz. The first products are already available for this application, for example, from SiBeam while several other companies are in the product development phase.

There has been lots of development work on the integrated circuit technologies. Foundries have developed fabrication processes towards nanoscale lithohgraphy and with improved performance. Foundry processes have advanced both on non-silicon (InP and GaAs) and silicon based (SiGe and CMOS) processes. The first ones are more suitable for performance driven rather low volume applications while the last ones are used more in consumer electronics products. Behind of this development are large investments. On the other hand, transitions from performance driven professional, infrastructure and space applications towards consumer applications have pushed module techniques towards low cost techniques. LTCC has been widely used in the RF front-end modules portable devices like mobile phones e.g. [1]. In last years, LTCC has also been applied successfully to microwave and millimeter wave modules.

The system-in-package LTCC platform is a true three dimensional module technology. LTCC is a lightweight multi-layer technology having typically 6-20 ceramic layers and metallizations between. The metallization levels i.e different metal layers can be patterned and connected together with metal vias. Passive devices can also be fabricated on LTCC while active devices and other chips are connected with flip-chip, wire bonding or soldering. In addition to passives directly fabricated to LTCC, several different technologies/ chips can be hybrid integrated to the same module. LTCC platform is also well suited for the realization of antenna arrays for microwave and millimeter wave applications. Potential applications are ranging from short range communications to space and radars. VTT has designed, fabricated and characterized microwave and millimeter wave packages for Radio Frequency (RF) Micro Electro Mechanical Systems (MEMS) as well as active devices. Also, several types of system-in-package modules have been realized containing hybrid integrated CMOS and GaAs MMICs and antenna arrays. In this paper, we present a typical LTCC technology available at VTT, its processing as well as realized components and modules from RF to millimeter wave frequencies.

II. LTCC Technology

Low temperature co-fired ceramic technology combines many thin layers of ceramic and conductors. It has often used as 3D wiring circuit board, using rather low permittivity (ε_r = 4–9) dielectric compositions. It also allows mixing of passive microwave components, such as transmission lines, filters, antennas, inductors, capacitors, phase shifters and dividers. The realisation of integrated capacitors requires higher permittivity. Commercial LTCC materials with the relative permittivity >100 are available. The low sintering temperature (<900 °C) allows the use of highly conductive metals, such as Ag or Au as conductors. There are more and more applications at millimetre waves, which require the development of low-loss dielectric compositions. Other important parameters to consider include thermal expansion of coefficient (CTE) match with typical semiconductor materials, high strength and high thermal conductivity. Typically the material properties remain quite constant over a wide frequency range. Instead, the millimeter wave performance of the LTCC modules is mainly affected by processing issues, such as line width variations due to printing steps or shrinkage during firing [2].

LTCC process is started by preparing slurry which is a mixture of ceramic powder, glass, binders and solvents. This slurry is cast with a doctor blade method to form a tape with a

chosen thickness. This tape is typically heat-treated prior to a start of the processing. Via holes are realised using mechanical punching or lasering method. The holes are filled with conductive paste by stencil-printing. The conductors are then typically screen-printed. It is also possible to use other methods, such as photoimageable pastes or etching. These alternatives are, however, limited to either certain material systems or to only surface layers. The individual layers are then stacked, laminated and fired. The lamination pressure is typically 21 MPa (3000 psi), temperature 70-85 °C and duration about 10 min. Prior to the lamination, silicone inserts are molded into the cavities to keep the shape of the cavities during lamination. After the lamination they are carefully removed. The firing profile varies significantly between the tape systems. Sometimes it has to be optimised for different modules, for example if the thickness of the substrate changes a lot. After firing the substrate is diced, followed by the component assembly. A flow chart is shown in Fig. 1.

VTT has several commercial material systems available as shown in Table 1. VTT's millimeter wave applications are mainly based on Ferro A6-M system. Its relative permittivity is 5.74 at 60-70 GHz, and loss tangent 0.0023. The system utilizes screen-printed gold (Au) conductors, with the conductivity of 2.5 x 10^7 S/m. Some processing parameters have been compared in Table 2 between VTT and typical commercial manufacturers.

At millimeter waves the assembly methods have to be considered carefully. Flip-chip interconnections eliminate the parasitic inductances caused by bonding wires. If the flip-chip process is not feasible in some cases, ribbon bonding can be used instead of conventional wire-bonding. VTT's flip-chipping process is based on the use of Au stud bumps. The diameter of the bumps is about 60 µm and the height about 20 µm. The attachment of a component is then made with thermo-compression method. The bonding force and temperature has to be optimized for each component type. The fabricated LTCC module is attached onto a printed wiring board with reflow process. The size of the BGA balls has to be selected by making a compromise between the high-frequency properties and reliability [3].

There are certain issues to consider when designing high-frequency modules. For example, large metal areas can cause excessive warpage during the co-firing process. In practise, the metallisation coverage should be <50% for each layer. This may decrease the quality factors of components and degrade isolation properties. The thermal conductivity of the tapes is about 2-4 W/mK which is not necessarily enough if high-power components are utilised. Thermal vias or even more complicated cooling methods may be required.

TABLE I.
MATERIAL OPTIONS AVAILABLE AT VTT.

Tape system	**Fired thickness [µm]**	**Permittivity**	**Tand δ [%]**	**CTE [ppm/K]**
Ferro A6-M	96, 196	5.74	0.23 (70 GHz)	>8
DuPont 951	40, 90, 130, 200	7.8	0.15 (10 MHz)	5.8
Heraeus HL800	88	6.8	<0.5 (2.5 GHz)	5.7
Heraeus HL2000	89	7.4	0.26 (2.5 GHz)	6.1
Heraeus CT800	-	8.4	0.18 (1 kHz)	8.4
Heraeus CT707	105	6.4	0.46 (2.5 GHz)	8.1
Heraeus CT765	84	65	0.17 (2.5 GHz)	9.1

TABLE II.
COMPARISON OF PROCESSING PARAMETERS BETWEEN COMMERCIAL FOUNDRIES AND VTT.

Parameter	**Typical values with commercial manufacturer**	**VTT's typical values**
Min line width [µm]	150	50
Tolerances of linewidths [µm]	±20	±5
Layer-to-layer positioning accuracy [µm]	60	15
Min diameter of vias	150	100
Min spaces for vias	300	100
No. of layers	10-24	4-20

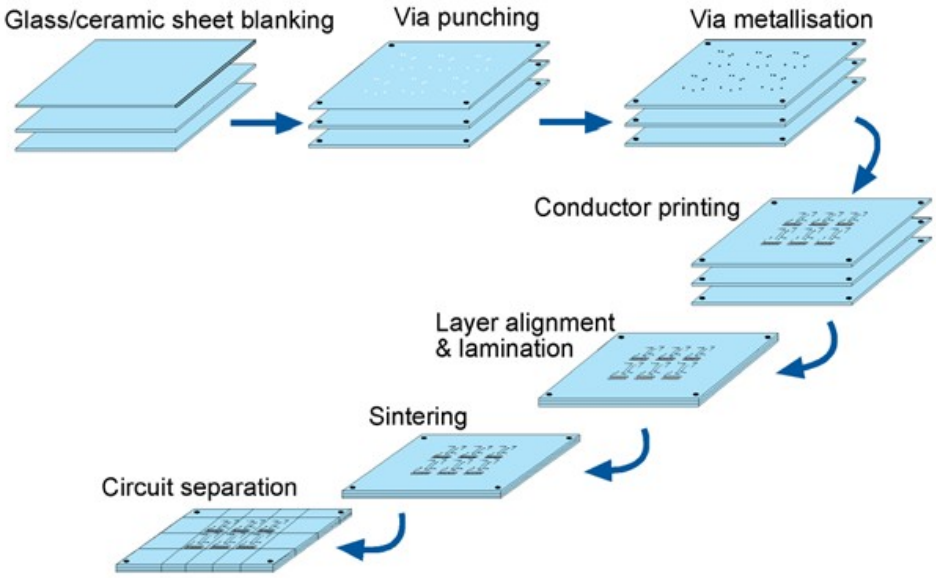

Figure 1. LTCC processing flow chart.

III. LTCC Components

A. *Antennas*

It is beneficial to have antennas as an integrated part of radio modules. Total system performance can be improved when the loss between an antenna and radio front-end electronics is minimized. In addition to that, the system size is smaller when radio front-end electronics is connected directly to the antenna with hybrid integration methods. Multilayer LTCC technology is well suited to compact antennas especially at microwave and millimeter wave frequency range. Fabrication accuracy in LTCC is good enough to produce micro and millimeter wave transmission lines, small dimension antenna apertures and other structures. Examples of realized antennas are given in this chapter.

Microstrip or patch antennas are well suited for millimeter-wave applications and LTCC processing due to their small size, light weight and planar structure. Patch antennas are also very well suited to LTCC modules. If an aperture coupled design is used then the feed can be on the other side of the substrate and patches on the other side as in [4]. Following figure shows an example of an aperture coupled antenna array. Performance can also be improved if electronic band-gap structures are used as in [5].

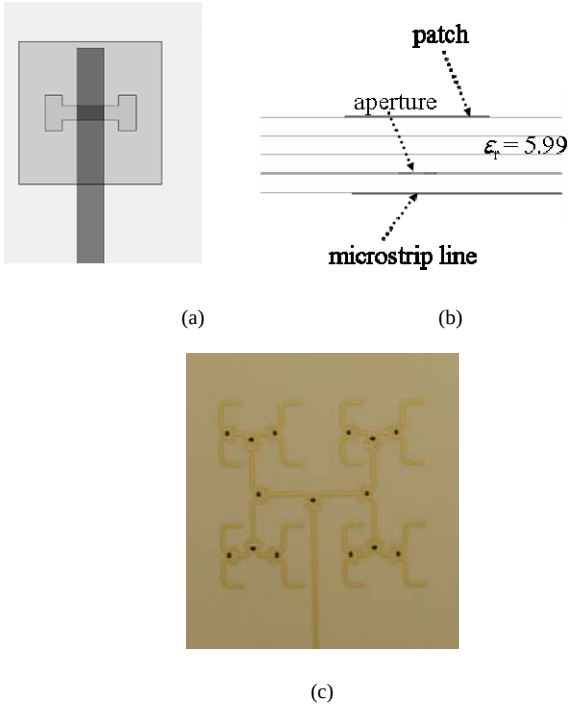

Figure 2. a) Layout of an aperture coupled antenna, b) schematical drawing of the layer set-up used in a 60 GHz antenna and c) realized 60 GHz 4x4 microstrip antenna array feed on LTCC with Wilkinson power dividers [4].

Antenna beam steering is typically realized with phase shifter. However, there are no available commercially off-the-shell (COTS) phase shifters at millimeter waves. Another

option is to use switchable antenna elements or sub-arrays and control them with single-pole-N-throw (SPNT) switches. VTT has worked with both of the concepts. Wideband and low loss phase shifters and tuning circuits have been developed based on RF MEMS technology for frequencies up to 220 GHz e.g. [6,7]. Following figure shows measured phase below 50 GHz design while corresponding insertion loss is between 3.1 and 3.8 dB at 35 GHz. A drawback of such wideband, distributed phase shifters is their rather large size. Also, RF MEMS technology is not currently mature enough to be used in space applications. There is on-going work at VTT to integrate RF MEMS phase shifters to antenna modules as well as increase the maturity level of VTT's RF MEMS technology.

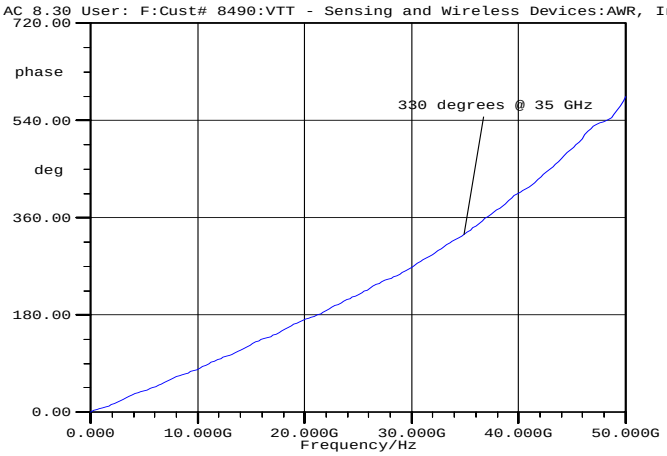

Figure 3. Measured phase shift for an RF MEMS phase shifter developed at VTT while corresponding measured loss is between 3.1 and 3.8 dB at 35GHz [6].

Single-Pole-N-Throw switches are rather small in size at millimeter wave frequency range. They are also commercially available as COTS components at least up to 94 GHz. VTT has designed, realized and characterized 77 GHz switched beam antenna. The module consist of a W-band (75-110GHz) WP-10 waveguide to LTCC microstrip transition, SP4T switch and three switchable end-fire antennas as shown in the following figure [8].

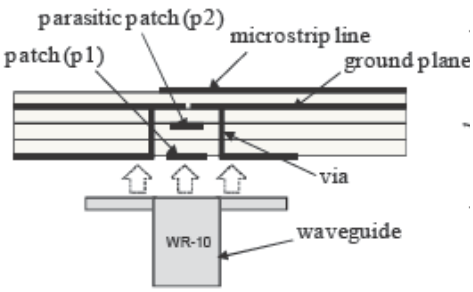

(a)

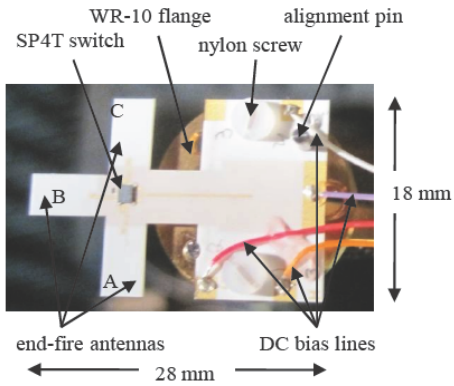

(b)

Figure 4. a) Schematical drawing of a transition from a metal waveguide to microstrip line on LTCC. b) Photograp of a fabricated switched beam antenna on LTCC having integrated waveguide to LTCC transition and flip-chipped single-pole-4-throw switch [8].

IV. LTCC Modules

The use of LTCC technology is the most beneficial when integration level is high in modules. Typically, passive components, MMIC circuits and antennas can be integrated to the same module as well as package them when needed. Following figure shows a 3-dimensional layout drawing of a 60 GHz transmitter module designed at VTT. It shows that LTCC modules can have integrated antenna arrays, flip chipped or wire/ribbon bonded active millimeter wave circuits, surface mount passive devices (SMD) and place for a connector if needed. The radiating patch antennas are on the other side of the module.

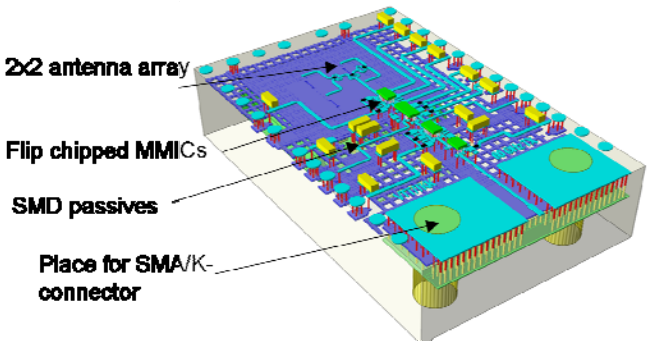

Figure 5. 3D-layout drawing of a 60 GHz transmitter module on LTCC showing integration capabilities of the LTCC technology. The multi-chip module has integrated antennas, flip-chipped MMICs and SMD passives and place for a connecter with through module interconnection holes.

VTT's LTCC platform has been used in the realization of a millimeter wave identification (MMID) reader module [9]. The schematics of the complete MMID reader module is presented in Fig. 6 and photographs of the complete LTCC module are presented in Fig. 7. The CMOS components (oscillator, mixer,

LNA, MPA) are connected to LTCC using flip-chip bonding. Interconnections between the components utilise 50-ohm microstrip line. Antenna arrays are integrated on the LTCC, as well as power splitters and filters. IF output and bias connections are routed to PCB using BGA connections on the component side of the LTCC. Differential IF is fed to two SMA connectors on the carrier substrate, and 15-pin D-connector is used as a bias connector.

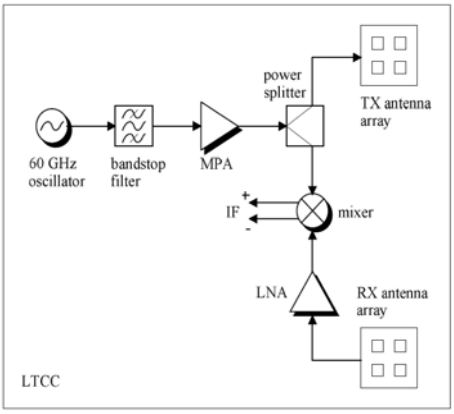

(a)

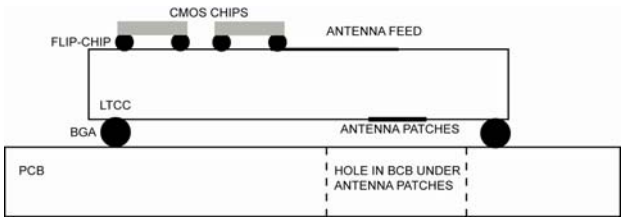

(b)

Fig. 6. a) Block diagram of the MMID reader. Shaded components are implemented on Silicon, others are integrated to the LTCC. b) Schematic view of the reader module based on the LTCC technology. CMOS chips are flip chipped to LTCC substrate which also contains antenna arrays, filters, power dividers and other passives. The LTCC module is connected to printed circuit board (PCB) with ball grid arrays (BGA). [9].

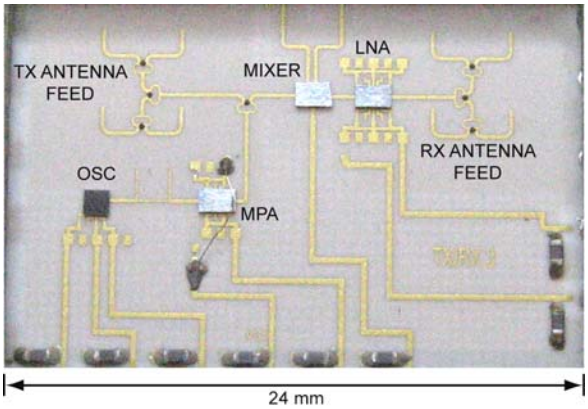

(a)

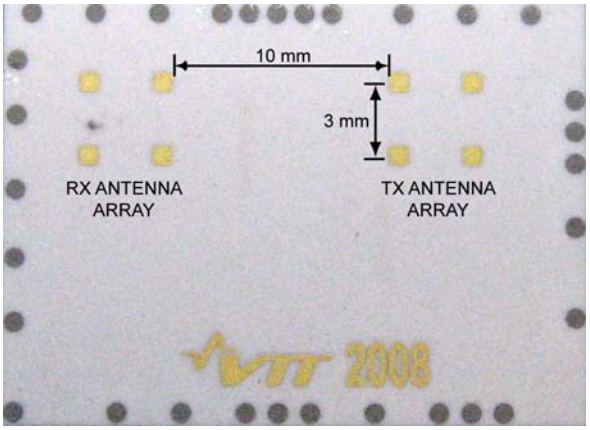

(b)

Figure 7. Photographs of the LTCC module. On the component side (a) the CMOS components from the left to right are the oscillator, MPA, mixer and LNA. Feed line networks of the antenna arrays are seen on upper corners. On the other side (b) the antenna arrays are seen. Module measures 24 × 13 mm^2.[9].

CONCLUSIONS

LTCC technology platform was introduced and VTT's technology was compared to typical other LTCC providers. Examples of LTCC components and modules were shown.

REFERENCES

[1] T. Vähä-Heikkilä, "LTCC - 3D Integration Platform from Handset to Millimeter Wave Modules," Workshop on 3D Microwave and Millimeter-Wave Packaging at the IEEE International Microwave Symposium, Anaheim, USA, May 2010.

[2] V. Kondratyev, M. Lahti, K. Kautio, "On the LTCC characterization in millimeter-waves", 40th European Microwave Conference, Paris, France, Sep 26 - Oct 1, 2010, pp. 156-159.

[3] T. Kangasvieri, J. Halme, J. Vähäkangas, M. Lahti, "Low-Loss and broadband BGA Package Transition for LTCC-SiP applications", Microwave and Optical Technology Letters 50: pp. 1036–1040, 2008.

[4] A. E. I. Lamminen, J. Säily, and A. R. Vimpari, "60-GHz patch antennas and arrays on LTCC with embedded-cavity substrates," IEEE Trans. Antennas Propag., vol. 56, no. 9, pp. 2865–2874, Sept. 2008.

[5] A. E. I. Lamminen, A. R. Vimpari, and Jussi Säily, "UC-EBG on LTCC for 60-GHz frequency band antenna applications," IEEE Trans. Antennas Propag., vol. 57, no. 10, pp.2904–2912, Oct. 2009.

[6] J. Saijets, P. Rantakari, M. Tuohiniemi and T. Vähä-Heikkilä, "Comparison of DMTL phase shifter designs," Proceedings of the 10th International Symposium on RF MEMS and RF Microsystems - MEMSWAVE, Trento, Italy, July 2009, pp. 37.-40.

[7] T. Vähä-Heikkilä and M. Ylönen, "G-Band Distributed MicroElectroMechanical Components Based on CMOS Compatible Fabrication," IEEE Transactions on Microwave Theory and Techniques, vol. 56, no. 3, pp. 720-728, 2008.

[8] A. Lamminen, J. Säily, "77 GHz beam-switching high gain antenna on LTCC" Proc. of ICECOM 2010, (2010).

[9] P. Pursula, T. Karttaavi, M. Kantanen, A. Lamminen, J. Holmberg, M. Lahdes, I. Marttila, M. Lahti, A. Luukanen and T. Vähä-Heikkilä, 60 GHz Millimeter Wave Identification Reader on 90 nm CMOS and LTCC, IEEE Transactions on Microwave Theory and Techniques, vol.59, no. 4, pp. 1166 - 1173, April 2011.