MMIC Subharmonic Mixer for 94 GHz

T. Kiuru[1], A. González[2], and T. Närhi[3]
[1]Aalto University School of Electrical Engineering
MilliLab, SMARAD, Department of Radio Science and Engineering
P.O. Box 13000
FI-00076 AALTO, Finland
tero.kiuru@aalto.fi

[2] Formerly with European Space Agency, currently with National Astronomical Observatory of Japan

[3] European Space Agency
RF Payload Systems Division

***Abstract*-In this paper the design steps and simulations as well as measurement results for a subharmonically pumped fully monolithic 94 GHz mixer are presented. The mixer is based on a antiparallel pair of GaAs Schottky diodes. The best measured conversion loss at 94 GHz is 13.2 dB with a very low LO power level of 1.2 mW. Biasing is not needed. The mixer uses center conductor and ground conductor stubs for impedance matching.**

I. Introduction

Subharmonic mixers are often preferred over fundamental mixers at millimeter wave frequencies. The reasons include lower frequency LO source, better noise properties as well as RF/LO isolation. Gallium Arsenide (GaAs) based diode mixers have been designed for W-band and higher frequencies using hybrid or monolithic approach. A full W-band mixer is described in [1].

Our approach utilizes an antiparallel diode pair for the optimal cancellation of noise and the second harmonic of the LO frequency, which would be very close to the wanted RF frequency of 94 GHz. For matching and filtering circuits the mixer employs center conductor and ground conductor series stubs [2]. The lowest measured conversion loss at 94 GHz is 13.2 dB with a very small LO power level of 1.2 mW and no bias current. The chip size is 2.16 x 0.94 mm^2.

II. Circuit Design and Layout

The MMIC circuit of the subharmonic mixer is shown in Figure 1. This circuit was fabricated using the BES process from United Monolithic Semiconductors (UMS). The mixer consists of a shunt antiparallel pair of Schottky diodes and of center conductor and ground plane stubs for filtering and impedance matching. The diodes and all the filter elements were designed and simulated separately using a full-wave simulator (HFSS) and a circuit simulator (Agilent ADS). An equivalent circuit model for the antiparallel diode pair is shown in Figure 2. Diode 1 and Diode 2 in the Figure refer to the actual diode junctions with a nonlinear junction capacitance and a series resistance. The optimization of the component values was done by fitting the circuit simulation results to the full-wave simulation results of a corresponding structure, where the diode junctions were filled with a passive GaAs layer. As an example, a full-wave simulation for the optimization of the IF output structure is shown in Figure 3 with an E-field plot.

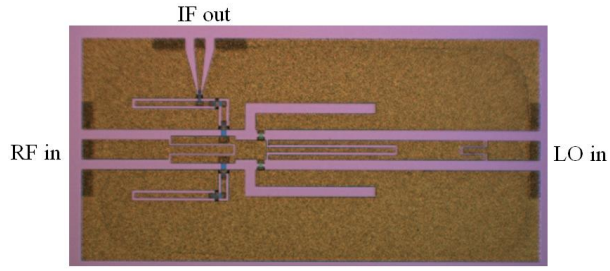

Figure 1. Microscope photograph of the subharmonic mixer chip.

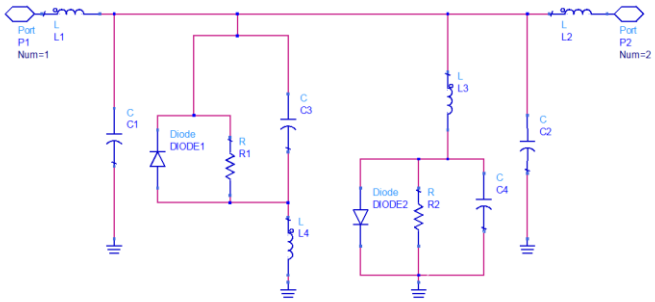

Figure 2. Equivalent circuit for the antiparallel diode pair.

III. Measurement Setup

The measurements were done using a Cascade Microtech probe station. The RF signal source was an Agilent PNA vector network analyzer and the LO signal source Agilent Millimeter-Wave Source Module 83556A. The local oscillator frequency was 45.75 GHz and the power was swept between 0.2 – 5.7 mW (incident input power at the probe tips). The measurement setup is shown in Figure 4.

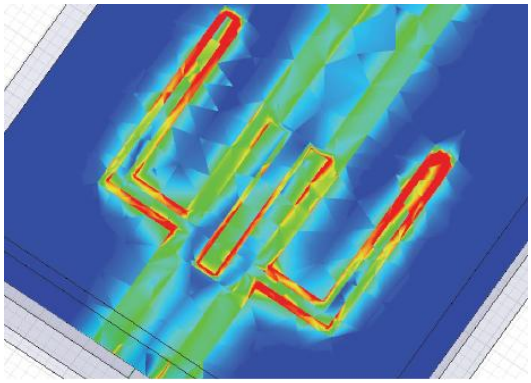

Figure 3. Full-wave simulation for the optimization of the IF output structure. The excitation is in the RF port at 94 GHz.

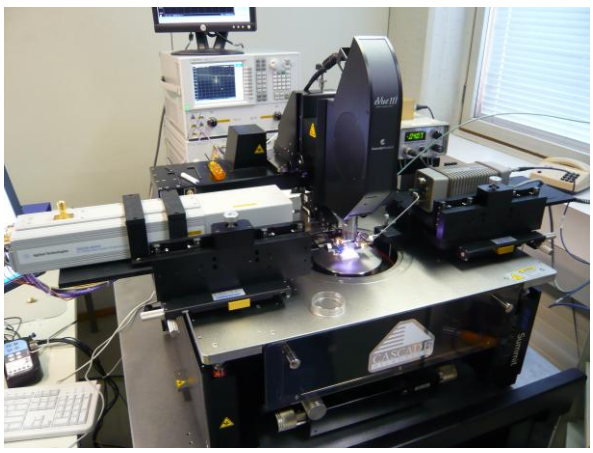

Figure 4. Measurement setup for subharmonic mixer measurements.

IV. Results and Discussion

Measured conversion loss of the mixer at 94 GHz as a function of the LO power is shown in Figure 5 and the measured reflection coefficient in Figure 6. The lowest measured conversion loss is 13.2 dB with a very low LO power level of 1.2 mW and the corresponding reflection coefficient is -7.4 dB. The lowest conversion loss achieved in simulations is 7.8 dB with a corresponding reflection coefficient of -20 dB.

We believe that there are at least two explanations why the measured and simulated performances differ so much. The first is that the design was done in separate blocks and the coupling between the blocks and the diodes was not taken into account. This was verified after the measurements when a full model of the circuit was simulated using HFSS and the corresponding S-parameters were used in circuit simulations of the mixer. With this complete model of the device, the best conversion loss was around 10 dB and the corresponding reflection coefficient was -8.4 dB. The second reason for the differences between measurements and simulations could be that the circuit is not fully symmetric for the CPW transmission line mode and there are no air bridges to suppress the coupled slotline mode. Some

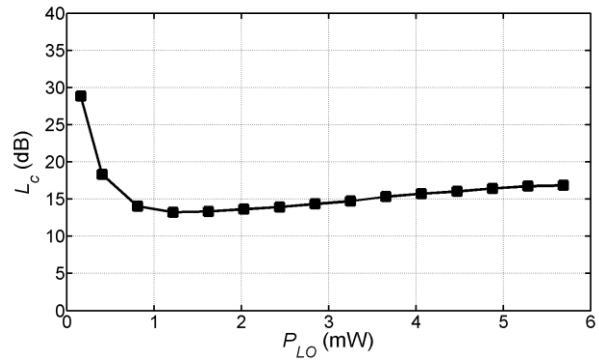

Figure 5. Measured conversion loss as a function of the LO power at 94 GHz.

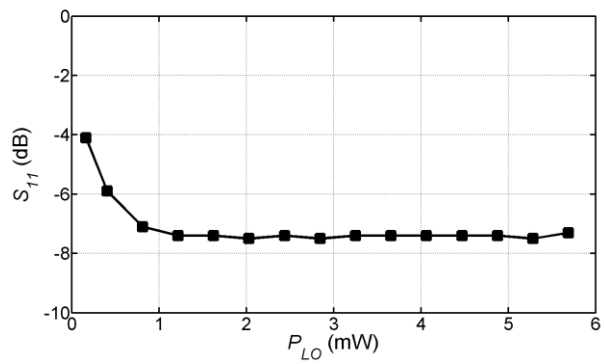

Figure 6. Measured reflection coefficient as a function of the LO power for the RF signal at 94 GHz.

of the energy could couple to this unwanted mode at all discontinuities.

V. Conclusions

The design steps and simulation and measurement results of a subharmonically pumped 94 GHz mixer were presented. The best conversion loss attained at 94 GHz is 13.2 dB with a very low LO power level of 1.2 mW. The mixer needs no bias current. The chip size is 2.16 x 0.94 mm^2.

Acknowledgment

The authors wish to thank Mr. Eric Leclerc from United Monolithic Semiconductors for fabrication of the circuits and Dr Byron Alderman from STFC Rutherford Appleton Laboratory for post-processing the circuits. This work has been funded in part under ESA/ESTEC Contract No. 20861/07/NL/GLC.

References

[1] Y-J. Hwang, C-H. Lien, H. Wang, M. W. Sinclair, R. G. Gough, H. Kanoniuk, and T-H. Chu, "A 78-114 GHz monolithic subharmonically pumped GaAs-based HEMT diode mixer," *IEEE Microw.Wireless Compon. Lett*., vol. 12, no. 6, pp. 209–211, June 2002.

[2] G. E. Ponchak and L. B. Katehi, "Open- and short-circuit terminated series stubs in finite-width coplanar waveguide on silicon," *IEEE Trans. Microw. Theory Tech*., vol. 45, no. 6, pp. 970-976, June 1997.