Mixer Test Jig for Millimeter Wave Schottky Diodes

K. Dahlberg[1], T. Kiuru[1], J. Mallat[1], A. V. Räisänen[1], and T. Närhi[2]
[1]Aalto University School of Electrical Engineering
MilliLab, SMARAD, Department of Radio Science and Engineering
P.O. Box 13000, FI-00076 AALTO, Finland
krista.dahlberg@aalto.fi

[2]European Space Agency, RF Payload Systems Division
P.O. Box 299, 2299 AG, Noordwijk, The Netherlands

***Abstract*-In this paper a mixer test jig for millimeter wave Schottky diode testing is presented. Changing of the diode under test is easy, which enables the comparison of different discrete Schottky diodes in the actual operating environment. The nominal frequency of the mixer test jig is 183 GHz. The mixer test jig has been tested with a commercial Schottky diode and the measured double side band (DSB) conversion loss is 4.6 dB and the mixer noise temperature is 650 K.**

I. Introduction

Characterisation and development of Schottky diodes are extremely important because the Schottky diode mixers are probably the most important components of sensitive receivers at millimeter and submillimeter wavelengths [1, 2]. Generally Schottky diodes are characterised by traditional current-voltage (I-V) and capacitance-voltage (C-V) measurements. The diode can also be characterised by S-parameter measurements. A parameter extraction and an equivalent circuit modeling are carried out based on the measurement results [3]. However, a uniform method to compare different Schottky diodes based on the mixer operation in the actual operation environment would be beneficial. In this paper a mixer test jig for testing and comparing of different single-anode Schottky diodes at 183 GHz is presented.

II. Fundamental Mixer Test Jig

A photograph of the mixer test jig is shown in Fig. 1. The mixer test jig consists of split-waveguide blocks and a 3D-illustration of the lower waveguide block is shown in Fig. 2. The RF and LO matching of the diodes is performed with integrated low-loss EH-waveguide tuner [4] and the IF impedance can be matched with an external coaxial tuner. The diodes are mounted on identical substrates and the waveguide block is the same for all diodes. The DC and IF connections are produced in a way that the substrate with the diode can be easily changed.

III. Measurements

The fundamental mixer test jig has been tested with VDI-SC2T6 diode by noise measurement based determination of double side band (DSB) conversion loss and mixer noise temperature [5]. The measurement setup is presented in Fig. 3. A backward wave oscillator (BWO) OB-66 is used as the LO source and an absorber plate in the room temperature (hot load) and in the liquid nitrogen (cold load) as the RF source. The LO noise is a disturbing factor in the noise-based measurements. Therefore, a narrow-band diplexer is needed for filtering the LO noise.

The used LO frequency is 182.6 GHz, IF frequency is 1.05 GHz and LO power is 2.1 mW. The bias current and EH-tuner are adjusted for the optimum conversion loss at the signal frequency of 183.65 GHz using Agilent PNA 5250A Vector Network Analyzer as the RF source. The noise power of the whole setup and the noise power of the IF chain are measured at different adjustments of the variable attenuator of the IF chain using HP 8970A Noise Figure Meter.

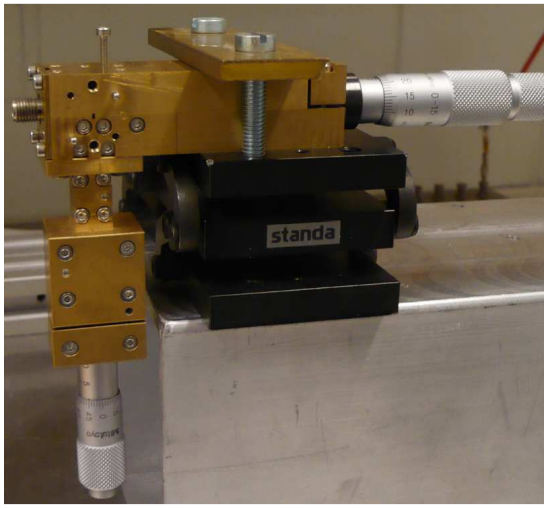

Figure 1. Photograph of the mixer test jig on a supporting device.

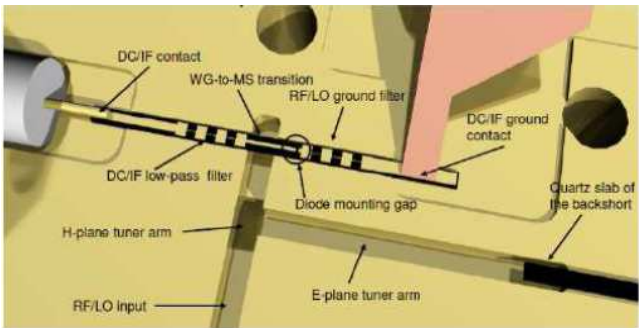

Figure 2. 3D-model of the lower waveguide block of the mixer test jig.

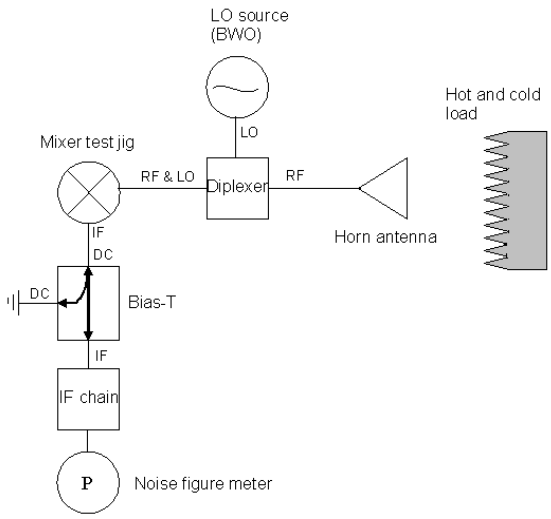

Figure 3. Measurement setup.

The noise temperature of the whole measurement setup is linearly related to the noise temperature of the IF chain and the DSB noise temperature, T_M and conversion loss, L_{DSB} can be solved by plotting the noise temperature of the whole measurement setup as a function of the noise temperature of the IF chain. A straight line is then fitted to the measurement results and the slope of the line is the DSB conversion loss of the mixer and the intersection point of the y-axis is the DSB noise temperature of the mixer. The measured DSB conversion loss and noise temperature with and without the IF tuner are shown in Table 1, where also for comparison the conversion loss results with the PNA as the RF source are presented. The IF tuner is used to improve the mixer performance by matching the IF impedance to the mixer impedance and the IF tuner is placed after the bias-T.

IV. Subharmonic Mixer Test Jig

Nowadays the discrete diode mixers above 100 GHz are often realized as subharmonic mixers using an antiparallel diode pair. The subharmonic mixers have better noise properties and the LO is pumped at a frequency that is about half of the RF frequency, which is a great advantage at higher millimeter and submillimeter wavelengths because no diplexer is needed. This means also that in a case of subharmonic mixer test jig the problems caused by the noise of the LO source (BWO) are alleviated.

We are now in the process of designing a subharmonic mixer test jig for antiparallel Schottky diode pairs at the nominal frequency of 183 GHz. Some RF front-end components used and tested during the development of the fundamental mixer test jig can be utilized also in the subharmonic mixer test jig [4, 6]. A possible structure of the subharmonic mixer test jig is introduced in Fig. 4.

TABLE I
Fundamental Mixer Test Jig Measurement Results

	PNA measurements	**Noise measurements**	
Measurement	L_{DSB} [dB]	L_{DSB} [dB]	T_M [K]
Without IF tuner	5.0	4.9	780
With IF tuner	4.1	4.6	650

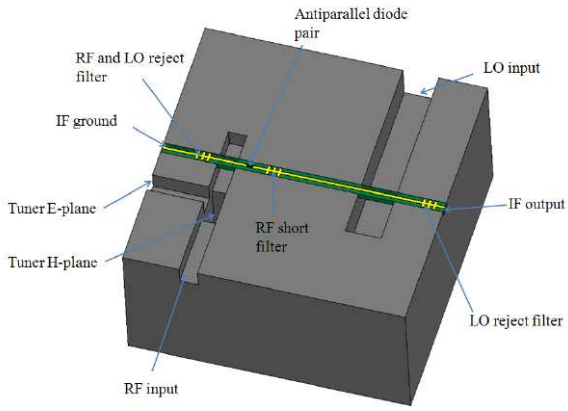

Figure 4. Possible structure of the subharmonic mixer test jig.

V. Conclusions

A universal, reliable way to compare different Schottky diodes would be beneficial not only for best mixer design but also for diode development. In this paper a mixer test jig for millimeter wave single-anode Schottky diode testing presented. The changing of the diode under test is relatively easy, and therefore the comparison of different Schottky diodes in their actual operating environment is possible. The tuning of the RF and LO impedances of the diode is smooth with an integrated EH-tuner and the IF impedance can be matched with an external tuner. The mixer test jig is tested with a commercial Schottky diode and the DSB conversion loss is measured to be 4.6 dB and noise temperature is measured to be 650 K using IF tuner and 2.1 mW LO power. The work continues with a design of another test jig for antiparallel Schottky diode pairs.

Acknowledgment

We thank Mr. Eino Kahra from Aalto University for the help of mechanical details and Mr. Jaakko Paakkari from Precia Inc. is acknowledged for the mechanical fabrication of the waveguide blocks. This work has been done as a part of ESA/ESTEC Contract No. 22228/09/NL/GLC: Characterisation of Schottky diodes.

References

[1] T. W. Crowe, W. L. D. W. Porterfield, J. L. Hesler, and R. M. Weikle, “Opening the Terahertz window with integrated diode circuits,” *IEEE Journal of Solid-State Circuits*, vol. 40, pp. 2104-2110, October 2005.

[2] J. Stake, T. Byllert, A.-Y. Tang, H. Zhao, J. Vukusic, A. Malko, V. Drakinskiy, A.O. Olsen, and A. Emrich, “Development of integrated submillimeter wave diodes for sources and detectors,” in *Proc. 5th European Microwave Integrated Circuits Conference*, September 2010, pp. 226-229.

[3] V.S. Möttönen, J. Mallat, and A.V. Räisänen, “Characterisation of European millimeter-wave planar diodes,” in *Proc. 34th European Microwave Conference*, The Netherlands, 2004, pp. 921-924.

[4] T. Kiuru, K. Dahlberg, J. Mallat, A. V. Räisänen, and T. Närhi, “EH impedance tuner with dielectric-based backshorts for millimeter wave diode testing,” in *Proc. 40th European Microwave Conference*, September 2010, pp.1357-1360.

[5] R. Trambarulo and H. S. Berger, “Conversion loss and noise temperature of mixers from noise measurements,” *IEEE MTT-S Int. Microwave Symp*., 1983, pp. 364-365.

[6] K. Dahlberg, T. Kiuru, J. Mallat, A. V. Räisänen, and T. Närhi, “Simple waveguide-to-suspended microstrip transition with low-pass filter,” in *Proc. 40th European Microwave Conference*, September 2010, pp. 671-674.