Quasi-Optical Monopulse Antenna/Feed at THz Band

Chenglin Hu, Wenbin Dou
State Key Laboratory of Millimeter Waves, Southeast University, Nanjing 210096, China
wbdou@seu.edu.cn

Abstract- **A novel quasi-optical monopulse antenna/feed structure is proposed, which is composed of combined sphere lenses, quasi-optical monopulse comparator, matching lens and pyramidal horn. Its performance at THz is analyzed based on FDTD method. And the parameters of the monopulse antenna have optimized to get better bandwidth and null depth performance.**

I. INTRODUCTION

At microwave band, various monopulse sum and difference networks composed of waveguide or microstrip components is very popular and has good performance. However, these components are very difficult to manufacture and the absorptive losses are significant at THz bands. To avoid the disadvantages, a novel quasi-optical monopulse comparator, which is low loss and polarization independent, has been proposed and analyzed by Rolf Jakoby [1]. Jakoby analyzed the comparator by means of modal expansion technique (MET). Based on Jakoby's structure, Gang An replaced the paraboloid reflector antenna with sphere lenses and analyzed a single stage of the network by using finite-difference time-domain method (FDTD) [2].

In this paper, the working frequency of the monopulse antenna/feed is increased from 0.09THz to 0.9THz, and the parameters of the antenna are optimized to get better phase matching, so the bandwidth and null depth performance can be improved. The system is analyzed by means of FDTD.

II. ANALYSIS

Fig.1 shows a single comparator stage of the quasi-optical monopulse sum and difference network, which can perform either azimuth or elevation angle measurement. The stage consists of two oppositely located, plane reflectors and a low loss quasi-optical 3-dB beam splitter symmetrically positioned between them. The beam splitter and the two plane reflectors have equal surface dimensions and are arranged parallel to each other and at a 45˚ angle to the input plane. The plane wave from a target is split up by the quasi-optical hybrid to portion A and B. The comparator stage output subfields are derived by an indirect comparison of the portion A and B. The aim is to cause the superimposed portions of the input field in the comparator output subfields to be in-phase at S2 port and anti-phase at S1 port respectively.

Lens and horns are added to get a quasi-optical monopulse antenna/feed as shown in Fig.2. Parameters of the quasi-optical monopulse antenna/feed have to be optimized carefully to get good null depth performance over a wider band.

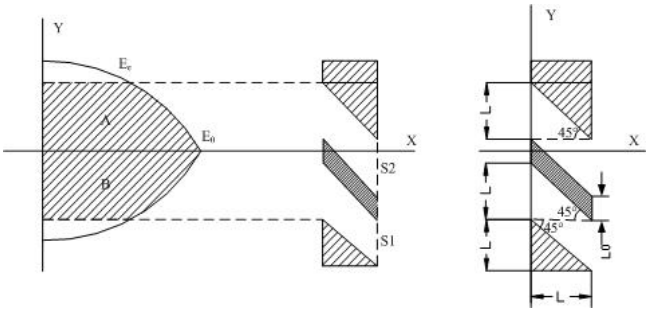

Fig.1 Quasi-Optical Monopulse Comparator

As an example 900GHz band is considered. The dimensions of the comparator are: L=3.92mm, L0=0.32mm. However, this L0 is not the best. Fig.3 depicts the simulated power density along S1 and S2 port plane of the 3-dB beam splitter for different L0. Here the 3-dB beam splitter is made of Quartz. It can be concluded that when L0=0.34mm, the sum and difference performance is the best. Given the thickness of beam splitter 0.34mm, then sphere lens and receiving components are added to the system.

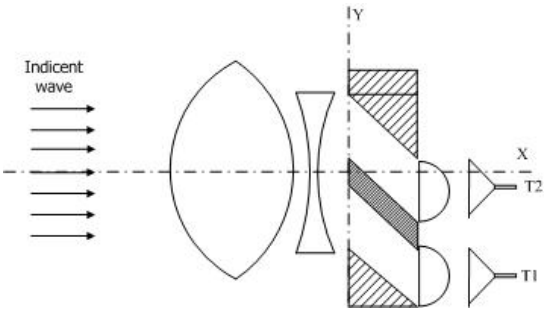

Fig.2 Quasi-optical monopulse antenna/feed

Also, the dimensions have to be optimized in order to get better performance. Fig.4 presents the normalized power in waveguide T1 and T2, respectively, which shows the null depth of 900GHz monopulse antenna/feed with different distance between matching lens and horn. It can be seen that when the distance is 1.54mm, the null depth is 44.9dB, which is the best. By optimizing other parameters, the best null depth performance is given in Fig.5, in which the null depth is 44.9dB. Given the best dimensions, the time domain field in the whole monopulse antenna/feed structure at different time step is calculated and shown in Fig.6.

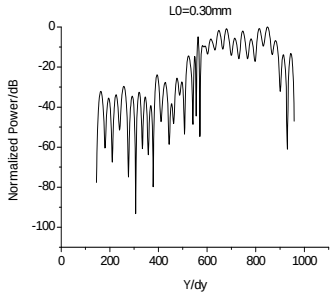

(a)

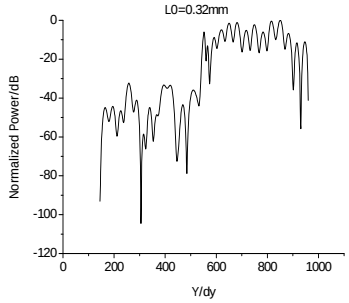

(b)

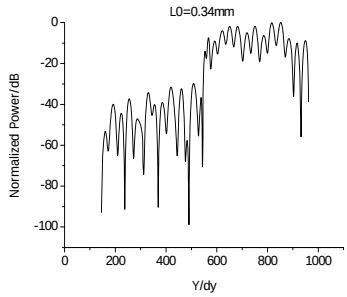

(c)

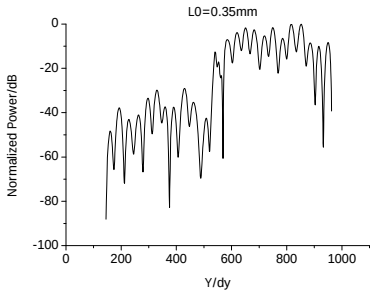

(d)

Fig.3 Optimization of the thickness of 3-dB beam splitter in 900GHz

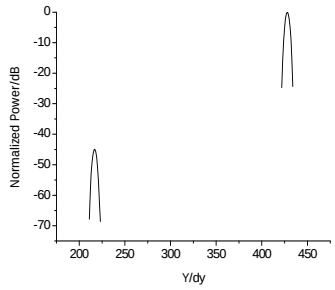

(a) distance=1.54mm

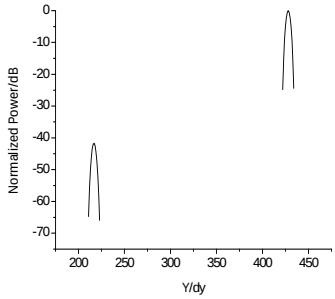

(b) distance=1.6mm

Fig.4 Optimization of the distance between matching lens and horn for 900GHz

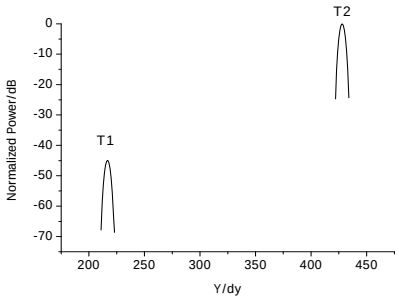

Fig.5 Power density in waveguide T1 and T2 at 900GHz

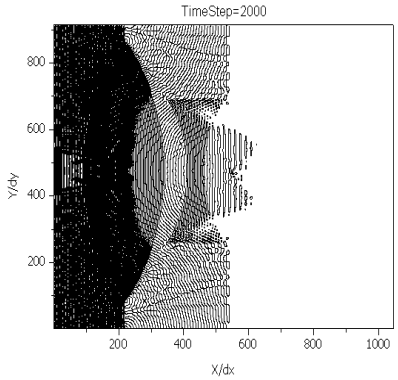

(a)

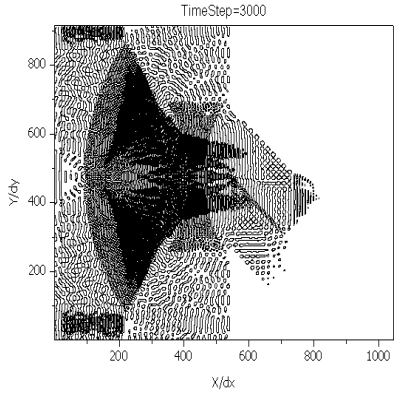

(b)

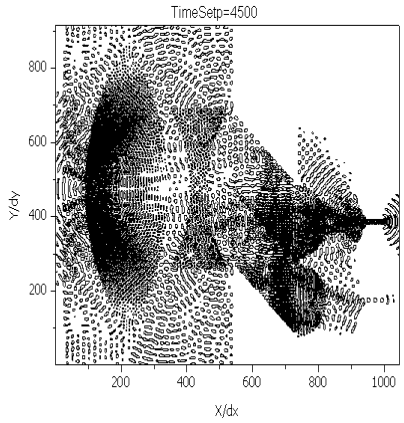

(c)

Fig.6 Field distribution at different time step for 900GHz monopulse antenna/feed

Also the null depth bandwidth of THz band quasi-optical monopulse antenna/feed is calculated and the result is given in Fig.7. We can see that the bandwidth is 5.5GHz for 20dB null depth and 2.22GHz for 30dB null depth. The results may be not excellent, but it is sufficient for most applications.

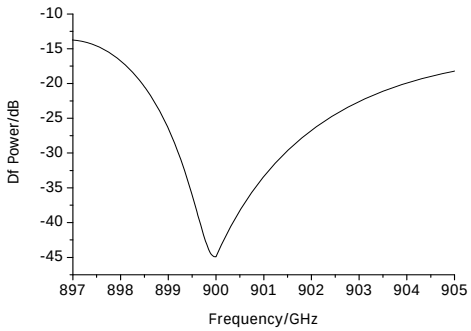

Fig.7 Bandwidth for sub-millimeter monopulse antenna/feed

III. CONCLUSIONS

A novel quasi-optical monopulse antenna/feed structure is analyzed by means of FDTD. Considering the too large electrical size of the system, only one single stage is studied in two-dimensional situation. To get better bandwidth, the optimization is carried out in order to make the monopulse antenna/feed work perfectly. The bandwidth performance is given.

The following works will focus on three-dimensional quasi-optical monopulse. And both of the two stages structures will be analyzed in the future. After that the hardware will be manufactured and experiments will be carried out.

ACKNOWLEDGMENT

This work is supported by NSFC under grant 60921063.

REFERENCES

[1] Rolf Jakoby, "A novel quasi-optical monopulse-tracking system for millimeter-wave application," *IEEE Trans. Antenna and propagation*, vol.44, No.4, 466-477, April 1996.

[2] G. An, W. B. Dou, "Analysis of a sphere lens quasi-optical monopulse antenna/feed structure," *Journal of electromagnetic waves and applications*, vol.19, No.1, 83-93, 2005.

[3] H. P. Yin, W. B. Dou, "Analysis of an extended hemispherical lens antenna at millimeter wavelengths," *Journal of electromagnetic waves and applications*, vol.16, No.9, 1209-1222, 2002.

[4] Z. X. Wang, W. B. Dou, "Full-wave analysis of monopulse dielectric lens antenna at W-band," *Journal of Infrared, millimeter and terahertz waves*, vol.31, No.2, 2010.

[5] M. Alvarez Folgueiras, J. A. Rodriguez Gonzalez, F. Ares Pena, "Optimal compromise among sum and difference patterns in monopulse antennas:use of subarrays and distributions with common aperture tail," *Journal of electromagnetic waves and applications*, vol.23, 2301-2311, 2009.

[6] M. I. Petelin, "Quasi-optical components for high power wave beam control," *Terahertz science and technology*, vol.1, No.2, June 2008.

[7] R.J. Liu, W.B. Dou, "Design and Analysis of 3mm Multimode Monopulse Feed," *International Conference on Microwave and Millimeter Wave Technology*, Guilin, China, 2007.

[8] J.W.Mink, "Quasi-optical power combining of solid-state millimeter wave sources," *IEEE Trans. Microwave Theory Technol.*, vol. MTT-34, 273-279, 1986.

[9] C. Y. Chen, Q. Wu, "Characteristic analysis for FDTD based on frequency response," Journal of electromagnetic waves and applications, vol.24, 283-292, 2010.

[10] Allen Taflove, Susan C. Hagness, "Computational Electro-dynamics: The Finite-Difference Time-Domain Method," Londan, *Artech House*, 2000.