THz Interferometers in Geosynchronous Orbit - status and results

A. Emrich[1], E. Ryman[1], J. Embretsén[1], A. Carlström[2], J. Christensen[2] and J. Riesbeck[1]
1 Omnisys Instruments AB*, Västra Frölunda, Sweden
2 RUAG Space AB, Göteborg , Sweden

Abstract-**This paper presents the development of a demonstrator for the Geostationary Atmospheric Sounder (GAS) instrument and test results. GAS utilizes synthetic aperture radiometry to obtain desired spatial (30 km) and temporal (nowcasting) resolution for measurement of atmospheric temperature and humidity profiles under all weather conditions. These parameters are decisively important to meteorological and climate models at all time scales.**

I. Introduction

The instrument development project includes on-ground demonstration of both the imaging performance and the mechanical concept. This activity was concluded in October 2010 with a final presentation at ESTEC and all test results agreed with predictions and verified that such an instrument could be developed and meet the end user requirements. The design and implementation of the demonstrator will be presented with some system level test results.

Ruag Space AB has been the prime for the demonstration phase and responsible for the post processing, analyses and demonstrator system level tests.

Omnisys has been responsible for the electronics, i.e. front-ends, cross correlator back-end, LO system etc.

The plan for the next phase is still uncertain on the European side, but there is an ongoing development at JPL for a similar instrument, GEOSTAR. Omnisys are now working together with this team and are concentrating on the cross correlator part. A full custom ASIC in 65 nm CMOS has been developed and is currently being tested. The first test results are very encouraging with clock speeds (> 2.5 GHz) and power consumption (< 0.13 mW/ch/GHz) as expected. Full performance predictions will be disclosed at the conference. Full custom samplers are also being developed with a planned tape-out in mid 2011. Expected performance of these devices will be presented together with a preliminary design of a full cross correlate system.

II. Background

The current generation of millimetre wave sounders are embarked on-board Low Earth Orbit (LEO) satellites and provide meteorological data for numerical weather forecasting on a regular operational basis. Across-track scanning of the antenna beam is used to achieve a wide measurement swath leading to degraded resolution towards the swath edges. Global coverage is obtained after about twelve hours using the combination of a polar orbit and the Earth rotation. Examples of operational sounders in LEO are AMSU-A, which uses the oxygen absorption spectrum between 50-56 GHz for temperature profiling, and AMSU-B which operates around the water vapour absorption line at 183 GHz for humidity profiling.

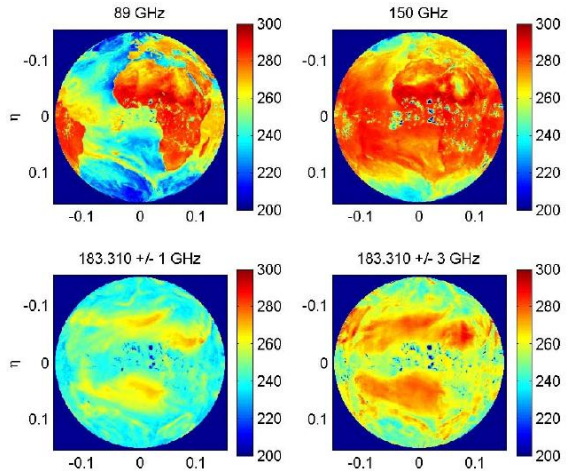

Figure 1. Synthesized picture of earth at different frequency bands.

Geostationary Earth Orbit (GEO) observations at these frequency bands have the key potential advantage of providing continuous coverage of the same region, which is essential for now-casting and short-range forecasting. The basic requirements for atmospheric sounding are:

- vertical resolution (relating to frequency resolution)
- horizontal resolution (relating to aperture size)
- measurement accuracy
- all weather capability (choice of frequency bands)

The main technical challenge for a GEO based sounder is the large antenna aperture needed to achieve the required spatial resolution, which corresponds to a 40 fold increase in the distance to Earth as compared to LEO. A classical reflector-based instrument solution is ruled out since an 8 meter dish will not fit into existing launchers and will further be mechanically difficult to scan with the desired accuracy on a spaceborne platform. Instead, in the preceding Phase 1, an interferometric solution with a Y-shaped rotating sparse antenna array configuration was defined. The instrument design has been further analysed in the present study as described in the following subsections.

The instrument requirements have been defined based on user needs for nowcasting and very short range forecasting. The highest priority has been to meet a requirement of 30 km horizontal resolution at the nadir point. The priority and justification for each of the frequency bands is summarized in the table below.

A summary of sub-bands allocated based on analysis of observation requirements as well as external restrictions is shown in Table 2 together with the sensitivity (Noise Equivalent Delta Temperature, NeΔT) requirements. According to meteorology users, the requirement on horizontal resolution (30 km) should have higher priority than the NeΔT requirement. In the 53 GHz band, some channels have increased bandwidth relative to AMSU-A. The bandwidth of the 50.3 GHz channel is partly outside the protected band.

Prio	Frequency bands [GHz]	Justification
1	53 & 183	Needed for basic measurements of temperature (T) and water vapour (WV). This is a minimum system configuration
1b	166	Window channel for surface correction and extend altitude coverage of WV measurements downward relative 183 GHz only. Low additional cost assumed.
2	118	Precipitation channel used for profiling. Provides dual frequency observation for temperature and adds capabilities to discriminate clouds and precipitation..
3	380	Better WV coverage at high altitude due to stronger line. Good for climatology and discrimination between precipitation and cirrus clouds.
3b	346	Window channel for surface correction and extend altitude coverage of WV measurements downward relative 380 GHz only. Low additional cost assumed.

Requirements driving the instrument design are:

- The horizontal resolution requirement of 30 km, which drives the antenna apertures at the different frequency bands.
- Measurement bandwidth which require an overall frequency plan with five to ten front end channels with several GHz bandwidth followed by multiple frequency selective sub-channels with bandwidths down towards 100 MHz.
- The image repeat cycle limits the available integration time, which together with NeΔT requirements drives the number of parallel measurements that are needed.

III. 2.3 Interferometry Concept

The interferometric imaging technique is well established within radio astronomy since the 1970's. During the last decade, the technique has become increasingly used also for remote sensing applications. With this technique, signals from an array of receiver elements, distributed sparsely over a large aperture, are pair wise cross correlated to sample the complex-valued visibility function, i.e. the spatial Fourier transform of the real-valued intensity image of the scene. It is critical that the cross correlation is performed such that the relative phase between the two signals received by each baseline is accurately measured, since this phase difference carries information on the direction of arrival of the radiation. The intensity image is then obtained through post-processing of the sampled visibility function data. There is a large freedom of selecting the distribution of the receiver elements and a concept can be found that provides large accommodation advantages relative a reflector based design.

The large aperture needed for 30 km resolution at 53 GHz is realized by a rotating Y-shaped array mounted on deployable booms. The full earth disc is scanned with 1-10 minute intervals and the desired image formation cycle can be selected during post processing. The deployable boom interferometer provides huge accommodation advantages relative a conventional reflector antenna of corresponding size. The instrument design is also scaleable and modular. The basic system covers the two AMSU bands (53/183 GHz) for temperature and water vapour sounding. The functionality can be extended to incorporate cloud and precipitation variables by including additional frequency bands around 118 GHz (oxygen absorption line) and 380 GHz (water vapour absorption line).

The instrument uses a large number of interferometer pairs, which measure the correlation between the received radiation at different baseline length and orientation. The number of different measurements obtained with each receiver pair is increased by rotating the Y-shaped mechanical structure, on which the receive antennas are mounted, around an earth pointing axis, see figure below..

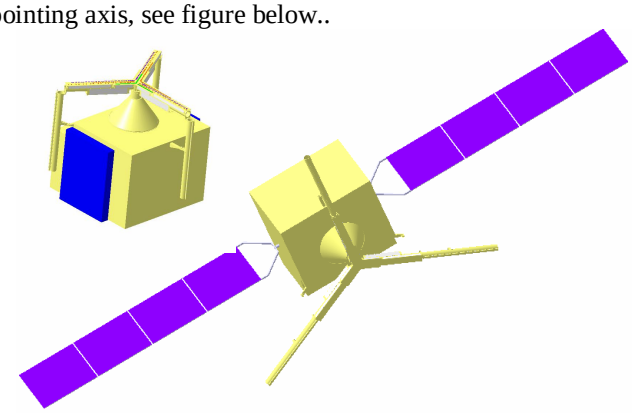

Figure 2. The Geostationary Atmospheric Sounder in stowed and deployed configuration.

The GAS instrument consists of the following subsystems:

- 53 GHz interferometer Subsystem
- 118 GHz interferometer Subsystem (option)
- 183 GHz interferometer Subsystem
- 380 GHz interferometer Subsystem (option)
- Calibration Subsystem
- Instrument Management Subsystem
- Thermo-Mechanical Subsystem

A block diagram of the instrument is shown in Figure 6. The instrument comprises a large number of dual polarized front-end modules where the antenna element is tightly integrated with the front end electronics. The modules comply with the close stacking requirements of the elements and are optimized

for minimum mass and size of a complete front-end element. Low noise amplification of the signal, harmonic LO generation, down conversion and IF amplification are implemented in one MMIC per polarization. An IF system is used to transport the signals from the front-end receivers to a central cross correlator, where the analogue signals are converted to three digital levels before being cross correlated with each other. The 45 nm CMOS technology provides the density needed to comfortably accommodate a complete cross correlator for up to 20 000 cross correlations on a single chip.

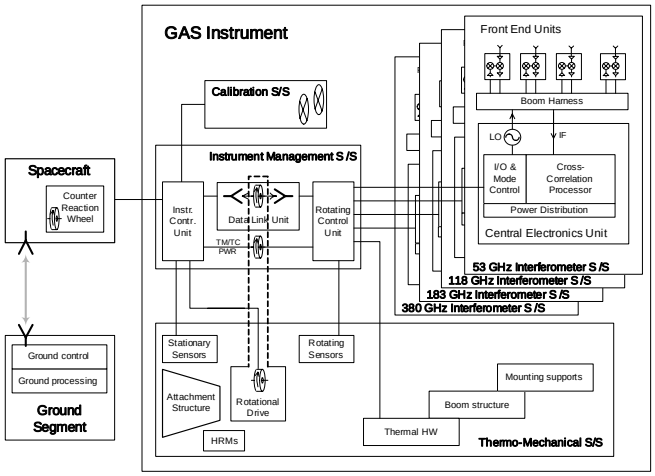

Figure 3. Instrument block diagram showing the different subsystems and units.

The analysis of the implementation of the instrument resulted in the following accommodation parameters:

- Power consumption: 406 W
- Mass: 375 kg

IV. Demonstrator

The main purpose of the demonstrator is to verify the end-to-end performance of the instrument concept, i.e. the performance models of the concept. Important features of the concept include the rotation of the antenna configuration and its polarisation discrimination capability. The demonstrator should therefore be representative with respect to these features.

The demonstrator is developed with the following objectives:

- Frequency band: in the 49-53 GHz range
- Number of elements: at least 19
- Image resolution: <10 mrad
- Image beam efficiency: >95%
- Relative accuracy of brightness temperature: <2K
- Image polarisation isolation: >10 dB (goal: 20 dB)

Many tests were performed in respect to basic parameters such as sensitivity, accuracy, linearity and polarization. In addition, imaging tests were performed with more complex sources, such as a moving sun and a house.

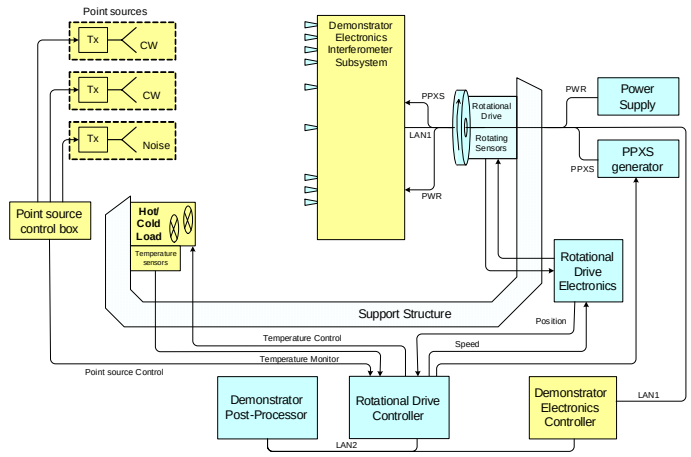

Figure 4. Demonstrator block diagram.

Figure 5. Demonstrator physical view.

V. Demonstrator Test Results

Test results showing the sun tracked over two hours can be seen below.

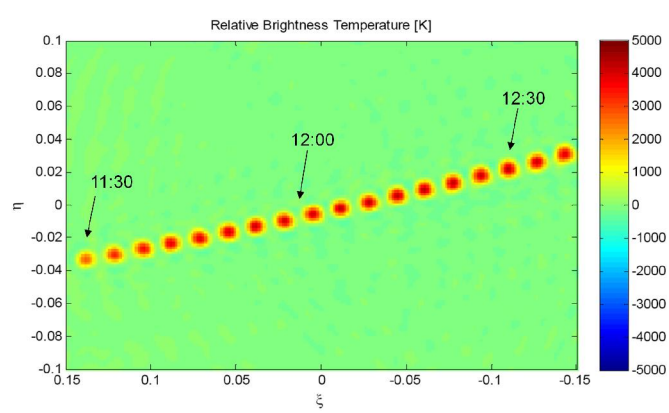

Figure 6. Demonstrator physical view.

The result is excellent. There are no ambiguities or distortions and the size and temperature of the sun is correct.

Test results from a more complex image is shown below.

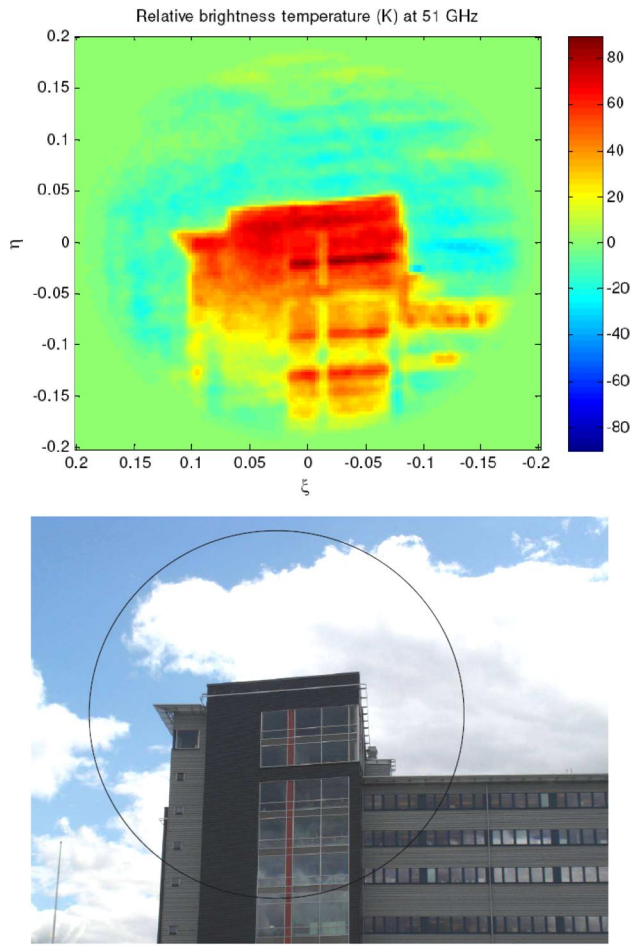

Figure 7. Synthesized picture at 51 GHz and optical photo.

Here we can also see that there are aliasing phenomena or ambiguities, even though we do not know the exact surface temperature of the building at 51 GHz.

A summary of the test result is shown in the table below.

Req. ID	Req. Title	Req.	Measured value	Compl. status
R.0020	Measurement frequency bands	49-53 GHz	49-53 GHz	C
R.0030	Measurement polarization	X & Y	X & Y	C
R.0040	Image polarization isolation	>10 dB (goal: 20)	11.7 - 23.4	C
R.0050	Image resolution	<10 mrad	7.6 - 9.3	C
R.0060	Beam efficiency	>95%	95.7%	C
R.0070	Image update rate	30 min.	30 min	C
R.0080	Image brightness temp. rel. accuracy	<2K	1.5 K	C

As can be seen, all objectives have been meet with full compliance.

VI. Supporting Activities

There has been and are on-going supporting activities for the geosounder project. Examples are boom and deployment mechanism breadboarding, front-end MMIC development and and cross correlator prototyping.

Figure 8. Boom and hinge testing.

The boom and mechanism test results have been very promising.

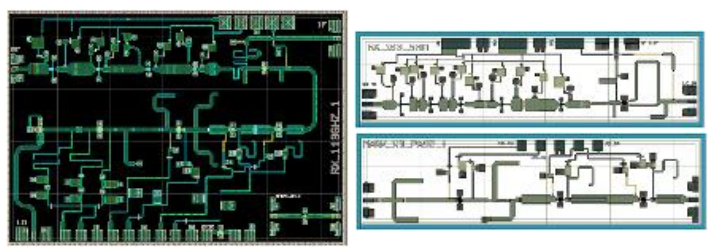

Figure 9. Front-end MMIC at 118 and 183 GHz.

The MMIC development has been successful and packing efforts are now pursued.

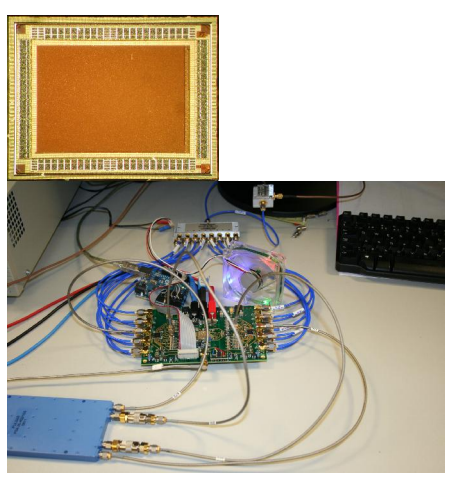

Figure 10. Cross correlator 65 nm ASIC and test set-up.

The cross correlator prototype has shown excellent test results with a power consumption that is 20-30 times lower than shown by other groups.

VII. CONCLUSION

Despite the difficult challenges encountered during this project - encompassing everything from highly integrated millimetre wave circuits, through high speed digital processing at the limit of todays technology capacity, to elaborate image reconstruction mathematics – the outcome is very successful and provides spectacular results for the meteorological user community to access.

We conclude that the objectives of the study have indeed been successfully accomplished:

- We have developed a demonstrator for a millimetre wave imaging sounder consisting of 20 dual-polarised receivers in a rotating sparse antenna array configuration using interferometric processing.
- We have demonstrated the imaging capability of such an instrument.
- We have achieved – with margin – the performance success criteria defined at the start of the activity:
- The obtained performance parameters agree very well with model predictions.
- The breadboarding and demonstration activities have increased the know-how on all levels: from components to systems.

The proposed interferometer concept for geosynchronous Earth orbit deployment, by Omnisys and Ruag Space, is therefore considered fully demonstrated.